City of Gardiner

Boiler Replacement Study

Gardiner, ME

August 3, 2009

Prepared By:

Integrated Energy Systems, PLLC

301 Middle Road
Falmouth, ME 04105-1229

Table of Contents

Table of Contents	2
Executive Summary	3
Building Energy	4
Boiler Options	5
Energy Saving Measures	11
Zoning Issues at City Hall	11
Appendix A – Oil Boiler Data	A1
Appendix B – Gas Boiler Data	B1
Appendix C - Wood Pellet Boiler Data	C1
Appendix D - Solar Domestic Hot Water Data	D1
Appendix E – Life Cycle Cost Analysis	E1
Appendix F – Energy Data	F1

Executive Summary

The scope of the project was to evaluate different boiler replacement options to heat the Public Works building and the City Hall building. Energy options include oil, propane, biomass (wood chips and wood pellets), geothermal, and solar domestic hot water. All of these offer great means to produce energy or to provide energy efficiency for the building. Although this was not a building energy audit, there were a few items that were noted while reviewing the heating systems.

A new boiler involves capital investment to install. If you are looking to reduce energy costs, some options have a long payback period or no payback due to the current low cost of fossil fuels. There are no incentives or rebates available for public buildings except for electrical upgrades such as lighting and motors. Some grant money may be available through various government agencies such as USDA for rural communities.

By investing in renewable energy systems, you

- Reduce the dependency on fossil fuels,
- Keep the money spent on energy in the local economy instead of sending it overseas
- Reduce the carbon footprint by 130 tons of CO2 per year,
- Enjoy stable fuel prices, and
- Create local jobs.

The lowest life cycle cost option for both buildings are the pellet boilers. With $1.98/gallon oil the payback is 16.8 years (4.9 years at $3.96/gallon) for the City Hall and 18.4 years (6.1 years at $3.96/gallon) for the Public Works building. Solar domestic hot water is also a good choice at City Hall to complement the pellet boiler system.

BUILDING ENERGY

The City Hall building is heated by two oil boilers. One boiler is located in the Police Department area and serves the offices and fire department living quarters. The 728,000 Btu/hr boiler is 40 years old and is beyond its life expectancy. The truck bays are served by a 794,000 Btu/hr oil boiler located near the hose tower. This boiler is over ten years old. Although it is not beyond the average life expectancy, it has had a cracked cast iron section replaced and currently requires another section to be replaced. Two 275 gallon oil tanks serve both boilers. The two boilers are not connected together, so if one boiler fails, that section of the building loses its heat.

The Public Works building is heated by one 959,000 Btu/hr oil boiler. The boiler serves hot water unit heaters in the truck bays and fintube radiation in the offices. This boiler also has had a cracked section replaced and requires a second section to be replaced. Oil for the boiler is stored in a 550 gallon oil tank with a secondary containment.

Last year's price for oil was $4.29/gallon and this year's price went down to $1.98/gallon. Fuel consumption for the previous year was 6,509 gallons for City Hall and 3,291 gallons for Public Works. Since fossil fuel pricing varies and can be volatile, and the boilers need to be replaced, now is a good opportunity to look at various energy sources. The following is a comparison chart of various energy sources and includes the efficiency of the equipment that would be using the energy.

Energy Comparison After Combustion

Heating Source	Fuel cost /unit	Cost per Therm ($ per 100,000 Btu)	Equivalent Cost to a gallon of oil
Existing Boiler Fuel Source	$1.98 per gallon	$1.79 per therm	$2.13
Electricity(electric heat)	$0.13 per kwhr	$3.81 per therm	$4.54
Propane	$1.45 per gallon	$1.69 per therm	$2.01
Oil	$1.98 per gallon	$1.66 per therm	$1.98
Electricity(cold climate heat pump, or geothermal heat pump)	$0.13 per kwhr	$1.27 per therm	$1.51
Natural gas	$1.50 per therm	$1.60 per therm	$1.90
Wood pellets	$240.00 per ton	$1.89 per therm	$2.25
Wood chips	$50.00 per ton	$0.80 per therm	$0.95
Solar	$0.00 per therm	$0.00 per therm	$0.00
Wind	$0.00 per kw	$0.00 per therm	$0.00

1 therm = 100,000 Btu/hr

As can be seen in the chart, oil, propane and natural gas are about the same price. Note that natural gas is not available at this site. The geothermal energy is fairly low, but, the installation costs for these facilities are high. Wood chips are a very good value, but storage costs are high. The least expensive energy sources are solar and wind. The building energy consumption is too high for solar and it is not a good site for locating a wind turbine, therefore, the focus was on oil, propane and pellets.

BOILER OPTIONS

A heat loss calculation was performed on each building. Due to the building envelope improvements over the years and due to some over-sizing of the original boilers, the new heating loads are significantly smaller.

	Original Boiler Capacity	Actual Heat Loss
Public Works	959,000 Btu/hr	265,000 Btu/hr
City Hall Offices/Living Quarters	728,000 Btu/hr	140,000 Btu/hr
City Hall Truck Bays	794,000 Btu/hr	294,000 Btu/hr

The new heating loads assume that on the coldest day of the year, it would take about one hour to heat the truck bays if the doors are opened and all of the heat escapes the garage. The heat loss calculations are very close to the actual fuel consumption when analyzed with last year's degree days.

Oil Boilers

The oil boilers can be replaced with 80% efficient commercial boilers or can be replaced with several residential boilers with 86.5% efficiency. Since the smaller residential boilers offer redundancy, are more efficient and are less expensive, it was used in the analysis. The existing chimneys are lined and would be reused. All of the existing boilers would be removed. In the City Hall building, one boiler room would exist and piping would connect the two heating systems together. This connection has been included in all of the options to provide a more fail proof system for a critical application such as a fire station and police department.

Dual Fuel Burners

Oil/gas burners were reviewed, but are not recommended. Gas/oil burners are available for the City Hall boiler, but it is really designed for much larger boilers. It adds complexity, maintenance and about $7,000 to each system due to the burner cost, and gas system. The gas/oil boiler is 80% efficient compared to 86.5% for oil and 94% for gas, therefore, the additional first cost and lower efficiency does not make this a good application.

Propane Gas Boiler

Efficiencies for propane boilers vary from 80% to 95%. It is recommended to use condensing boilers which are the 94%. Propane would be stored in tank provided by the gas supplier. The tank at City Hall would probably be installed in the parking lot at the end of the truck bays. The tank at Public Works would only require some pads and could be located near the boiler room. The piping from the tank to each building would be underground.

Wood Chip Boiler

Wood chips are a renewable energy source which is usually high quality hardwood chips that are used in the pulp and paper industry. There is an abundant source of chips and they are available locally. Other than solar and wind, wood chips are the least expensive fuel source. Chips can be from a whole tree which is chipped and delivered to the customer or it can be from left over stock that is chipped from a manufactured process. Most chips come directly from tree and require less energy to process than wood pellets which are ground, dried and compressed.

Wood chip boilers operate at a very high temperature, around 2000 degrees F. Due to this high temperature, they burn very clean and have very low emissions. There are many successful wood chip boiler projects in schools throughout Vermont, New Hampshire and Maine.

A wood chip boiler is not recommended due to lack of available space for installing a wood chip bin below grade and the high water table. Wood chip storage is more costly than wood pellet storage since it has to be unloaded from a tractor trailer and it has to be kept above freezing. These systems are more economical for heating requirements above 3,000,000 Btu/hr which is much larger than what is required at these buildings. In the future, small chip delivery trucks may make small chip systems more viable.

Maintenance for this system is simple. It requires periodic greasing, ash removal, and daily inspection. The ash is non-toxic and can be used for fertilizer.

Wood Pellet Boiler

Wood pellet boilers are similar to wood chip boilers. The primary difference is the fuel type, fuel storage and higher efficiency. Pellets are more expensive since it involves more energy and processing to manufacturer the wood pellets. Pellets are about 2.4 times more expensive than wood chips, but the pellet boiler system is much less expensive than a wood chip system. This is due in part from a less expensive conveyance system and a much less expensive fuel storage system.

One advantage of pellets is that the pellets can be stored outside since they are dry and will not freeze. The pellets are transferred to the pellet boiler hopper by an auger

enclosed in a pipe. The pellet fuel system is fully automatic as well as the ash removal system. The ash container does need to be periodically emptied. The ash is non-toxic and can be used for fertilizer.

Several pellet boilers where considered. Most are made in Europe, and a few are made in the US. They offer different efficiencies, features and capacities. The pellet boiler offerings in the US are growing. The major issue is certification by UL and ASME which are required for pressurized boilers over 200,000 Btu/hr. There are a couple of available boilers today with an ASME stamp. Several more will be available in the fall and winter. Non-ASME boilers may be installed if they are installed as a test case and are approved by the State Inspector and the City's insurance company.

Some manufactures offer boilers that can burn wood chips or pellets. Burning two fuel sources can mean two storage containers and manually changing grates to switch fuels. Burning chips and pellets during the same heating season is not recommended at this time until the fuel delivery system matures in the state. This would also increase the installation cost since there is not much interior space available for storage.

The pellet boilers reviewed for this project will fit in the existing truck bay boiler room and in the Public Works boiler room. A 56kw pellet boiler would be proposed for the Public Works building and a 100kw or two 56kw pellet boilers would be proposed for City Hall. The preferred method of storage would be an exterior silo pending setback requirements, but interior storage could be an option. In both locations, it is recommended to keep one oil boiler. This allows for backup heat, and allows for two energy sources.

Solar Domestic Hot Water Heater

The domestic hot water in each building is generated with oil fired boilers. City Hall is estimated to use 120 gallons per day and 5 gallons for the Public Works building. The Public works building should have a 2 gallon electric water heater installed under the sink.

The City Hall building has enough load to justify a solar hot water system. The roof of the truck bays provides adequate space for the collectors. The system analyzed comprised of three 30-tube collectors on the roof with one 120 gallon storage tank. It is not an ideal site due to the nearby trees on the southern side, but the third solar panel compensates for this. During the summer, the solar system would provide 87 percent of the domestic hot water. The remaining portion would be by an electric heating element. This would allow the boilers to be turned off during the summer months to save energy.

Energy for this system is free except for the circulation pump. This system has no greenhouse gases, nor any emissions for that matter.

The system cost is $14,400(including $1,000 state rebate) and has a payback of 22.5 years and life expectancy of 25 years. The payback with oil at $3.96/gallon is 13.8 years. The installed cost could be lowered if low flow aerators were installed on the

faucets and the shower heads. The lower cost would greatly reduce the payback period.

Geothermal

A true geothermal system which extracts high temperature energy from the earth, such as the geysers in Yosemite, is a renewable energy source. The geothermal systems in New England are more of an efficient heating and air conditioning system, rather than an energy source. They comprise of heat pumps that extract energy or dump energy into the ground through a series of standing column wells, vertical tubing, or horizontal tubing. The system operates by electricity, so if the electricity being purchased is generated from a renewable source, the entire system can be considered renewable. Since most of the electricity is generated from coal and gas, geothermal systems are more of an efficient heating and cooling system versus a renewable energy source. This is also true of cold climate heat pumps which extract energy from the air.

Geothermal systems obtain their great performance characteristics primarily from the air conditioning load. They can achieve EER of 22 where normal air conditioning would obtain EER of 13. During the winter, they operate at a COP of 3 to 3.5 which means that for 1 kwhr of power that it consumes, it generates up to 3.5 kwhr. Geothermal systems should have a proper load balance of air conditioning in the summer to the winter load.

The building has traditional heating and air conditioning equipment. It cannot be used with geothermal heat pumps since this equipment generates 120F water and the building requires 180F water. This would require increasing pipe sizes, replacing fintube, and essentially replacing most of the equipment in the building. Due to this extreme cost and the lower cost alternatives, this option was not explored.

A rough budget cost for geothermal would be $580,000. A preliminary life cycle cost analysis indicated that a geothermal system would have a higher life cycle cost than the oil boiler.

If in the future, the building envelope is improved or a major mechanical system upgrade is planned, a geothermal or cold climate heat pump system should be reviewed as a potential system.

System Comparison

A comparison of each boiler was performed. It assumes a 4% escalation for wood pellets and electricity and an 8% escalation for oil and propane. It is very difficult to anticipate what the cost of fuel will be over the years. The Energy Information Administration predicts a 1.5% escalation in oil and propane which would cause prices to increase 45% over the next twenty years. This does not seem reasonable since oil and propane prices went up 100% last summer. Using 8% escalation would cause the price of oil and propane to double in eleven years which is more reasonable based on last year's prices. As the economy slowly recovers, oil and propane costs will rise as demand increases again. To show the impact of fuel prices, the right side of the following charts include fuel costs similar to last year. The escalation rates are the same for both cases.

The first costs include engineering, code violation upgrades, and construction costs. An additional contingency should be added to this for a final budget appropriation.

The pellet boiler options include using one old boiler for backup. If a new oil boiler was used for backup or for shaving peak loads, it would add $5,000 to $10,000 depending on the size of the backup boiler.

City Hall Building						
	Oil=$1.98/gal & Propane=$1.45/gal			**Oil=$3.96/gal & Propane=$2.90/gal**		
	Oil Boiler	**Gas Boiler**	**Pellet Boiler**	**Oil Boiler**	**Gas Boiler**	**Pellet Boiler**
First Cost	$41,629	$59,549	$108,602	$41,629	$59,549	$108,602
Annual Operating Cost	$12,351	$12,440	$13,895	$24,302	$24,560	$13,895
Total Present Worth	$634,800	$659,617	$499,904	$1,221,006	$1,254,112	$499,904
Additional First Cost	Baseline	$17,920	$66,973	Baseline	$17,920	$66,973
Net Present Worth Savings	Baseline	$-24817	$134,896	Baseline	$-33,106	$721,102
Savings-to-Investment Ratio	Baseline	-0.385	3.014	Baseline	-0.847	11.767
Payback Period	Baseline	n/a	16.8	Baseline	n/a	4.9

In comparing the different systems, the gas boiler has about the same fuel cost as oil, but has a higher first cost due to removing the oil boilers, oil tanks, and installing the propane piping and tank. The more efficient propane boiler does not save enough energy costs to make this a viable option. The pellet boiler has a slightly better life cycle cost than oil and has a 17 year payback. It would save $134,896 over the 25 year study period. Based on life cycle costs, the pellet boiler would be recommended. It would save about 90 tons of carbon dioxide.

Public Works Building						
	Oil=$1.98/gal & Propane=$1.45/gal			**Oil=$3.96/gal & Propane=$2.90/gal**		
	Oil Boiler	**Gas Boiler**	**Pellet Boiler**	**Oil Boiler**	**Gas Boiler**	**Pellet Boiler**
First Cost	$20,494	$25,863	$62,542	$20,494	$25,863	$62,542
Annual Operating Cost	$6,030	$5,870	$6,635	$11,660	$11,580	$6,635
Total Present Worth	$303,615	$308,729	$248,433	$579,771	$588,809	$248,433
Additional First Cost	Baseline	$5,369	$42,048	Baseline	$5,369	$42,048
Net Present Worth Savings	Baseline	$-5,114	$55,182	Baseline	$-9,038	$331,338
Savings-to-Investment Ratio	Baseline	0.048	2.312	Baseline	-0.683	8.88
Payback Period	Baseline	n/a	18.4	Baseline	n/a	6.1

The outcome for the Public Works building is similar to that of the City Hall building. The pellet boiler has a slightly better life cycle cost than oil and has an 18.4 year payback. It would save $55,182 over the 25 year study period. Based on life cycle costs, the pellet boiler would be recommended. It would save about 40 tons of carbon dioxide.

Recommendations

A pellet boiler system would be recommended for building. It would provide the best savings over the life of the system. A pellet boiler coupled with a solar domestic hot water system for City Hall would reduce energy and allow the boiler to be off during the summer.

ENERGY SAVING MEASURES

Although the scope was a boiler replacement study, there were a few items that were noticed during the survey that could potentially help conserve energy. They are listed in order of priority.

- Repair and/or replace door weather stripping.
- Provide programmable thermostats to lower the temperatures at night or provide an integrated boiler/thermostat/cooling control system.
- Provide low flow aerators on faucets and showers.
- Insulate the City Hall truck bay walls and replace single pane windows with insulated glass.
- The unit heater motors appear to be very old. They should be reviewed and possibly replaced with more energy efficient motors. The unit heaters at Public Works should be replaced in their entirety in lieu of replacing just the motors.
- Provide a separate water heater to allow a cold start boiler at City Hall.
- Address the recommendations from the Efficiency Maine energy audit.

ZONING ISSUES AT CITY HALL

There are complaints of people either being too hot or too cold, so the heating zones were reviewed. There are about nine heating zones in the building which should be adequate. There are some conflicts with the zoning since the air conditioning zones are not the same as the cooling zones. Some of the interior Police department zones need cooling year round which conflicts with other zones.

Multiple zone valves on the same supply line were found. A new valve may have been installed after the old zone valve failed. The zoning controls are very old and newer more sophisticated controls could help control the heating as well as allow cooling for the zones that need it without simultaneous heating and cooling. Currently, some rooms have a cooling thermostat and separate heating thermostat. Re-ducting some of the areas would also be required.

Testing of the existing controls should be done to determine that all valves are working properly prior to the heating season.

Appendix A – Oil Boiler Data

WEIL-McLAIN

500 Blaine Street, Michigan City, IN 46360-2388 | www.weil-mclain.com

C-1010 R2 (1108)

Ultra Oil

High-Efficiency Oil Boiler

ULTRA OIL

Water - Chimney or Direct Vent

MBH: 98-172

Min. Efficiency: 86%

ENERGY STAR

Good Housekeeping Promises

WEIL-McLAIN

Ultra Oil

Weil-McLain leads the industry with its premium, smart, durable oil boiler.

With an extensive list of features for both contractors and homeowners including:

- Proven three-pass cast iron heat exchanger with captured elastomer seals
- Pre-wired for an optional fully-integrated control system that can manage automated applications
- Adaptable door design and interchangeable side panels that can accommodate most installation conditions
- Venting options – chimney or direct vent
- Burner options – Beckett NX or AFG, and Riello
- Hand truckable from 3 sides – front, back and left side

All housed in a sleek, innovatively styled jacket with rear piping and wiring openings, and concealed controls for an appliance-like appearance.

Distinctive Styling

Reversible Swing-Away Door - Flexible Installation Options

Ultra Oil features a full access, reversible swing-away door, which exposes virtually the entire combustion area and all flue-ways for simplified inspection, cleaning, and maintenance. The new design also incorporates a mounting bracket that can be installed on either the left or right side of the front section for installation in small, confined spaces and corners.

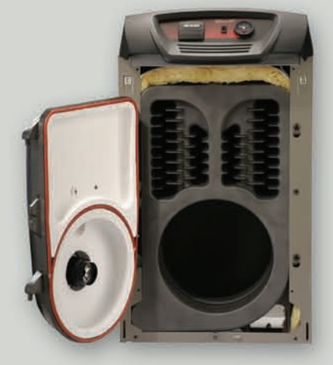

- Removable door lessens the overall weight when trucking
- The symmetrical design enhances strength and durability
- Bolts on both sides create a uniform consistent seal
- A quick-disconnect plug cuts burner power when the door is open

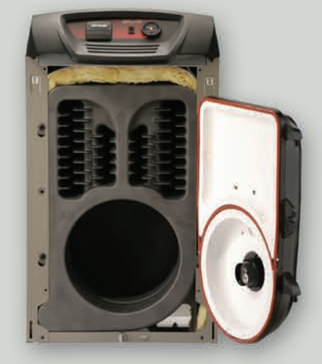

Three Pass Design

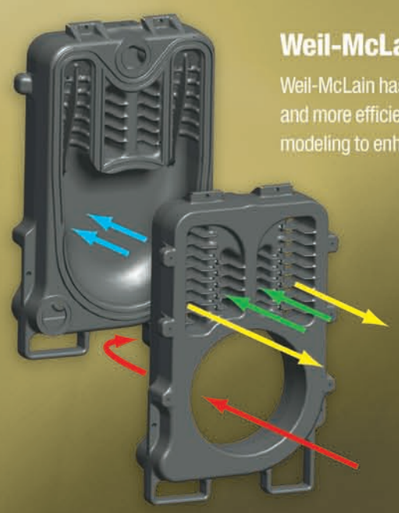

Weil-McLain Proven Technology

Weil-McLain has been using a three pass design concept for over 60 years because it provides better flame control, and more efficient fuel utilization, which reduces heating costs. The new Ultra Oil has incorporated finite element modeling to enhance overall boiler operation.

- Computer designed flue-way fins increase the heat transfer surface area, which extracts more heat and increases efficiency without penalizing boiler back pressure
- The new, wider flue-ways decrease the negative impact of fouling
- An added benefit of the three pass design is the horizontal configuration, which makes virtually all of the combustion chamber, turnaround, and flue ways visible from the front of the boiler for easy cleaning and maintenance
- Silicone coated fiberglass rope insures a positive seal
- Revolutionary rear section design directs the flue gas flow into the flue ways without sacrificing pressure drop through the inner and outer flue-ways which eliminates rear refractory

Captured Seals - Over 35 Years of Reliable Performance

Boiler sections will expand and contract as they heat and cool. Our captured seal allows the cast iron to move while preventing leaks, unlike rigid metal push nipples. The flexible elastomer sealing rings guarantee a watertight seal while the precision-machined port grooves secure them in place, and protect them from the contaminants of the water.

New Jacket and Side Panel Design – Stylish Appearance & Easy Access

Ultra Oil has a new, modern appearance that combines appliance-like design features for placement in high traffic living spaces, with easy serviceability for the contractor and homeowner

- The snap-on front jacket panel allows easy entry to the full access burner door
- The left and right side panels are interchangeable which eliminates installation mistakes
- All piping, wiring, and venting connections are located in the rear of the boiler for a cleaner look
- The entire housing and top control tray can be easily removed for hand trucking

Venting Options

Chimney or Direct Vent

The Ultra Oil boiler provides venting installation flexibility. It can be easily vented to an existing chimney, or direct vented using a pre-packaged termination and combustion air kit.

- Barometric damper included when venting to a chimney
- No chimney needed, and direct vent option provides better indoor air quality by protecting against possible contaminated inside air
- No power-assisted fan needed to help exhaust flue products
- Direct vent kit includes 15' of vent pipe and an outside termination cap

Burner Options

Beckett or Riello

- Beckett NX – (Chimney or Direct Vent)
- Beckett AFG – (Chimney Vent Only)
- Riello – (Chimney or Direct Vent)

Ultra Oil

Advanced Features Module

Optional Advanced Features Module (AFM)

Designed by Weil-McLain and Tekmar exclusively for the Ultra Oil boiler, the **A**dvanced **F**eatures **M**odule **(AFM)** was developed with the heating contractor in mind. The easy-to-read display takes the guesswork out of determining system operation, and easy to understand symbols indicate which devices the control has turned on, and whether the control and system is functioning as it should. The digital display can be mounted on the panel, or up to 500 feet away from the boiler.

Outdoor Reset

Low Tempurature Mixing

DHW Priority

Set Point Operation

Concealed Controls

Top Mounted, Hinged Control POD – And Integrated Control System

The top mounted hinged control POD includes a factory installed external service switch and temperature/pressure gauge for easy viewing. The unique, angled pod provides control system protection from dirt, moisture and temperature fluctuations, and includes an electronic aquastat. Factory assembled, pre-wired terminal strips simplify field wiring of incoming power, field mounted circulators, low water cut-off and additional limit controls that may be required by local codes. The wiring strip also includes dedicated terminals to quickly and easily install the optional **A**dvanced **F**eatures **M**odule **(AFM)** during or after the initial installation.

- The multi-functional aquastat display provides set point, temperature and diagnostic information

AFM Features Include:

- Dual Boiler Operation – The AFM will control two boilers to supply the required target temperature. The minimum time between each boiler operation is the total of the fire delay setting plus the minimum inter-stage delay setting.
- Equal Run Time Rotation – The AFM includes an adjustable setting to control the firing order of the boilers to ensure that both boilers receive equal amounts of use.
- Boiler Outdoor Reset – The AFM operates the boiler(s) to maintain the boiler supply temperature based on the outdoor air temperature and the boiler characterized heating curve settings.
- Mixing Outdoor Reset – The AFM is capable of providing a reset supply water temperature from the primary boiler loop to a secondary mixed loop when a mixing device is used (variable speed pump or floating action valve).
- Indirect Domestic Hot Water Operation – The AFM has three different settings for DHW operation based upon pipe configuration: DHW in parallel no priority, DHW in parallel with priority, and DHW in primary/secondary no priority. The AFM also has DHW limits to prevent freeze-up and DHW post purge and mixing purge to maximize efficiency.
- Setpoint Operation – The AFM has two setpoint modes available: setpoint in parallel where the primary pump does not turn on, but may operate on either a boiler demand or a DHW demand, and primary pump during setpoint where the primary pump is powered .

The AFM also includes powered pump outputs, lower water cutoff alert, warm weather shut down, built-in pump and valve exercising and thermal shock protection functionality.

WEIL-McLAIN

Standard Equipment

- Three-pass cast iron heat exchanger with captured elastomer seals
- Reversible swing-away burner door
- Silicone coated fiberglass sealing rope
- Boiler drain
- Relief valve (30psi)
- Attractive jacket design
- Hinged control POD
- Service switch
- Temperature/pressure gauge
- Factory wired terminal strips with labeled wires (pre-wired to accept external limits such as high limit and low water cut off)
- Electronic aquastat
- Quick disconnect burner plug
- Barometric damper
- Circulator

Optional Equipment

- Beckett NX – (Chimney or Direct Vent)
- Beckett AFG – (Chimney Vent Only)
- Riello – (Chimney or Direct Vent)
- Direct vent kit
- 50 psi relief valve

Advanced Features Module (AFM)

- Outdoor Reset
- Low Temperature Mixing
- Setpoint Operation
- DHW Priority
- DHW Priority Override
- DHW Post Purge
- Stage Fire Two Boilers
- Minimum Boiler Setting
- Automatic Boiler Differential
- Boiler Protection
- Warm Weather Shutdown
- Freeze Protection
- Mixing Device Exercise
- Pump Exercise
- Test Sequence
- LCD Remote Display
- Run Hours Log
- Plug-in Terminals

Ultra Oil

ULTRA Plus
Models Available: 40, 60, 80, 100, 110, 119

Endless hot water.

Weil-McLain brings you the perfect match. An Ultra Plus indirect-fired water heater and an Ultra Oil boiler are the best value combination for all your comfort heating and hot water needs.

Get more hot water when you need it, all at a lower operating cost.

High-Efficiency Oil Boiler Minimum Efficiency: 86%

Models	UO-3	UO-3	UO-4	UO-5
	Part No. 386-901-000	Part No. 386-901-000	Part No. 386-901-001	Part No. 386-901-002
Ratings				
I=B=R Burner Capacity (GPH)	0.80	1.00	1.20	1.40
CSA Input (MBH)	112	140	168	196
DOE Heating Capacity (MBH)	98	122	146	172
Net I=B=R Ratings (MBH)	85	106	127	150
DOE Seasonal Efficiency AFUE (%)	86.5	86.5	86.2	86.5
Draft Loss Through Boiler (inches wc)	.000	.020	.025	.040
Data				
I=B=R Chimney Rectangle	8”x8”	8”x8”	8”x8”	8”x8”
I=B=R Chimney Round	6”	6”	6”	6”
I=B=R Chimney Height	15’	15’	15’	15’
Water Volume	15.00 Gal.	15.00 Gal.	18.25 Gal.	21.50 Gal.
Approximate Shipping Weight	636	636	737	852
Dimensions				
Supply Tapping	1 1/2”	1 1/2”	1 1/2”	1 1/2”
Return Tapping	1 1/2”	1 1/2”	1 1/2”	1 1/2”
Depth – With Burner (B)	37”	37”	41”	45”
Depth – Boiler (L)	25”	25”	29”	33”

FRONT

SIDE

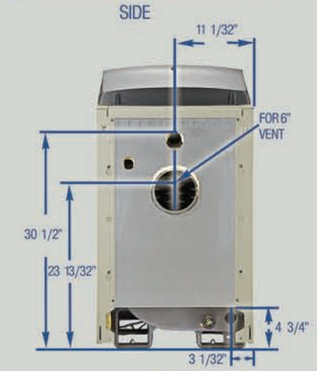

BACK

INTERMEDIATE

DOE ENERGY STAR Good Housekeeping Promises MADE IN THE USA

80, 88 SERIES 2, and 94

Weil-McLain Commercial

The payback is in Cast Iron. Consult with dedicated commercial specialist in each Weil-McLain area office.... www.weil-mclain.com

WEIL-McLAIN

- Weil-McLain captured seal design
- For Light Oil, Gas and Dual Fuel Combustion
- Packaged, Assembled Block or Knock-down
- Available for Water and Steam Heating Systems
- Low NOx options
- Available as Forced or Chimney draft venting
- Optional 5 Year Parts and Labor Warranty
- Wide selection of burners
- Tankless Heater options
- ASME iron

80 Output 278-1348 MBH (8-40 HP)

- Top or Rear outlet flexibility
- Easy access jacket

	Oil	Gas
Combustion	85%	82%
Thermal	83%	80%

Ratings

Boiler Model	I=B=R Oil Input GPH	I=B=R Gas Input MBH	I=B=R Gross Output MBH	Boiler H.P.	I=B=R Net Rating Steam MBH	Steam Sq. Ft.	Water MBH	Flue Outlet Dia.	Net Firebox Volume Cu/Ft	Stack Gas Volume CFM	Positive Pressure in firebox	Water Boiler Content Gallons	Operating Weight Pounds
380	2.4	346	278	8.3	208	867	242	8	2.61	139	0.28	37.5	1170
480	3.4	491	396	11.8	297	1238	344	8	3.97	198	0.28	49	1411
580	4.45	639	515	15.4	386	1608	448	8	5.33	259	0.28	60.5	1752
680	5.5	787	634	18.9	476	1983	551	8	6.69	320	0.27	72	2093
780	6.5	935	753	22.5	565	2354	655	10	8.05	378	0.27	83.5	2434
880	7.5	1082	872	26	654	2725	758	10	9.41	436	0.27	95	2774
980	8.5	1230	991	29.6	743	3096	862	10	10.77	494	0.27	106.5	3115
1080	9.6	1378	1110	33.2	833	3471	965	10	12.13	558	0.26	118	3456
1180	10.6	1526	1229	36.7	922	3842	1069	10	13.49	616	0.26	129.5	3697
1280	11.6	1674	1348	40.3	1018	4242	1172	12	14.85	675	0.26	141	4038

Notes
- Burner input based on maximum of 2,000 feet altitude. For higher altitudes consult local Weil-McLain representative.
- NO.2 fuel oil Commercial Standard Spec. CS75-56. Heat value of oil-140,000 Btu/Gal.
- Consult Weil-McLain Burner Specifications and Data Sheet for gas pressures required. Gross I=B=R ratings have been determined under the I=B=R provision forced draft boiler-burner units.
- Net I=B=R ratings are based on net installed radiation of sufficient quantity for the requirements of the building and nothing need be added for normal piping and pickup. Water ratings are based on a piping and pickup allowance of 1.15. Steam ratings are based on the following allowances: 380 thru 1180 - 1.333; 1280 - 1.321. An additional allowance should be made for gravity hot water systems or for unusual piping and pickup loads. Consult local Weil-McLain representative.
- Stack gas volume at outlet temperature.
- With 0.10" W.C. positive pressure at flue collar.

Dimensions

Boiler Model	Supply Tappings Qty - Size Water	Supply Tappings Qty - Size Steam	Return Tappings Qty - Size Water	Return Tappings Qty - Size Steam	Dimensions (Inches) - Reference Drawings A	B	D	F	H	L	W
380	2 - 4"	2 - 4"	2 - 3"	2 - 3"	13-1/8	-	8	12-7/16	13-1/2	21-5/8	20-3/8
480	2 - 4"	2 - 4"	2 - 3"	2 - 3"	20-1/8	-	8	13-5/8	20-1/2	28-5/8	27-3/8
580	2 - 4"	2 - 4"	2 - 3"	2 - 3"	27-1/8	-	8	13-5/8	27-1/2	35-5/8	34-3/8
680	2 - 4"	2 - 4"	2 - 3"	2 - 3"	34-1/8	-	8	13-5/8	34-1/2	42-5/8	41-3/8
780	2 - 4"	2 - 4"	2 - 3"	2 - 3"	41-1/8	-	10	27-5/8	41-1/2	49-5/8	48-3/8
880	2 - 4"	2 - 4"	2 - 3"	2 - 3"	48-1/8	-	10	27-5/8	48-1/2	56-5/8	55-3/8
980	2 - 4"	2 - 4"	2 - 3"	2 - 3"	55-1/8	-	10	41-5/8	55-1/2	63-5/8	62-3/8
1080	2 - 4"	3 - 4"	2 - 3"	2 - 3"	62-1/8	27-9/16	10	41-5/8	62-1/2	70-5/8	69-3/8
1180	2 - 4"	3 - 4"	2 - 3"	2 - 3"	69-1/8	34-9/16	10	55-5/8	69-1/2	77-5/8	76-3/8
1280	2 - 4"	3 - 4"	2 - 3"	2 - 3"	76-1/8	34-9/16	12	55-5/8	76-1/2	84-5/8	83-3/8

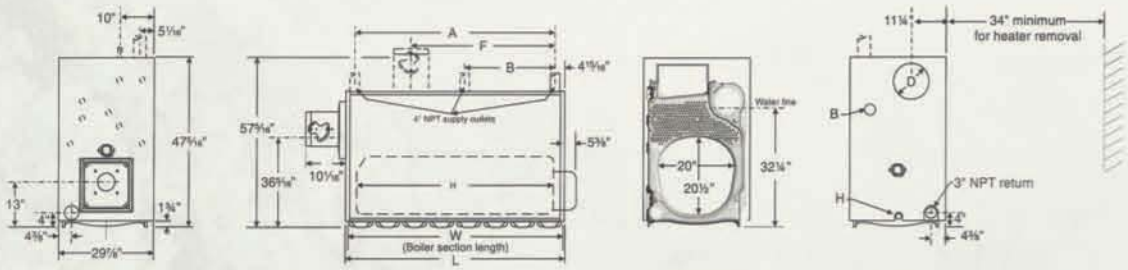

Standard Equipment

All Boilers
- Cast iron sections
- Insulated steel jacket
- Flame retention burner (except H-80)
- Burner mounting plate with refractory (except H-80)
- Aluminized steel flue collector assembly
- Steel flue collar and breeching damper
- Observation ports on front and rear sections
- Refractory blanket and target wal! in combustion area
- Side cleanout plates
- Flue brush

Water Boilers
- 30 PSIG ASME safety relief valve (sections tested for 80 PSIG maximum working pressure)
- Combination high limit/low limit control
- Combination pressure/temperature gauge
- Built-in air eliminator

Steam Boilers
- 15 PSIG ASME safety valve (side outlet)
- Low limit and high limit pressure controls
- Steam pressure gauge
- Gauge glass. gauge cocks and gauge guards

Optional Equipment
- Low water cut-offs (probe or float type)
- Tankless heaters
- Burner mounting plate (for H-80 boilers)
- Factory-assembled sections
- Fire-tested packaged boiler (with low water cut-off)

Appendix B – Gas Boiler Data

MOD CON

A MODEL OF CONSERVATION.

HeatTransfer
Advanced Heating and Hot Water Systems

Mod Con Stainless Steel Commercial Boiler

An Intelligent Design that Delivers Highly Efficient Hydronic Heating with 94% Thermal Efficiency

MH27745 US LISTED

CONTROLS

member gama

Stainless Steel Heat Exchanger

MOD CON Construction Features

Combustion System

- 94% Thermal Efficiency
- Modulating Burner with 5 to 1 turn down
- Whisper Quiet Operation
- Low NOx Operation
- High Grade Inconel Burner
- Reliable Spark Ignition
- Gas Valve (Tested to UL, FM, CSA Standards)

Heat Exchanger

- All Stainless Steel Construction
- No Gaskets, Welded Construction. ASME Approved
- 150 PSI Relief Rated
- Easy to Service

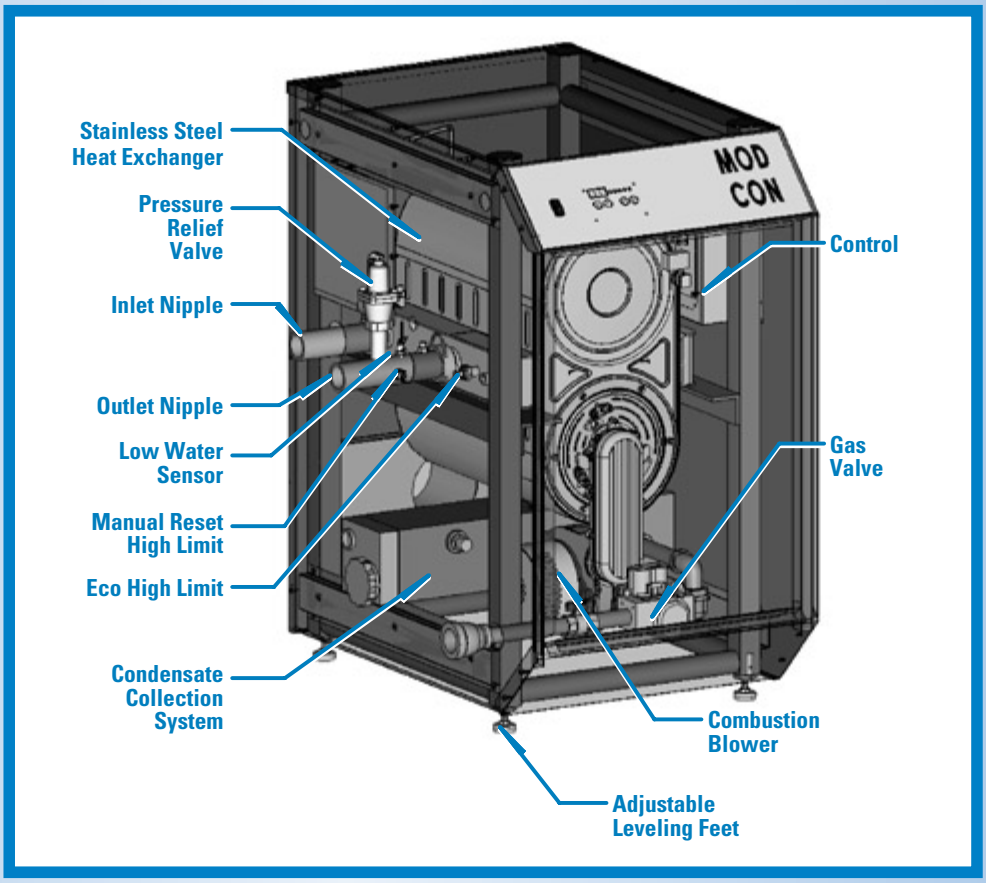

Integrated Control System

- Built-in sequencer for up to 8 boilers
- Digital display with LED status indicators
- Integrated Control allows only the amount of heated energy required.
- Outdoor sensing with Indirect priority, allows for greater energy savings and comfort
- Built in Low water cut off with additional manual reset high limit switch
- Multiple Pump outputs – Boiler Pump – System Pump – Indirect Pump
- 24 volt monitor for system safeties
- Dual flame sensing (Flame probe / Spark Ignition Probe)

MOD CON Additional Features

- Superior Condensate Collection System (Patent Pending) Easy to service with overflow protection
- PVC – CPVC – Stainless Steel Venting
- Vents up 200 feet combined
- Double Stack units for double the output in small foot print
- Adjustable Legs
- Direct Vent Sealed Combustion
- Models available for Natural or LP Gas
- Easy access to wiring and field service of combustion heat exchanger
- Zero clearance to combustibles
- Low water cutoff standard equipment
- High limit manual reset
- Removable front cover allows easy access to burner assembly
- Zero clearance to all combustible surfaces.
- Factory installed AGA/ASME rated relief valve.
- PC monitoring for history – system operation (optional)
- Self diagnostic electronic control with digital readout to monitor system parameters.

MOD CON Optional Equipment

- System Sensor (Part # 7250P-324)
- Indirect Sensor (Part # 7250P-325)
- 4" Stainless Steel Outside Termination Vent Kit (V2000)
- 6" Stainless Steel Outside Termination Vent Kit (V3000)
- High and Low Gas Pressure Switch Kit with Manual Reset (Part # 7350P-600)
- U.L. 353 Compliant Low Water Cut-Off Interface Kit with Manual Reset (Part # 7350P-601)
- Alarm System (Part # 7350P-602) (to monitor any failure)
- Stacking Kit (Part # 7350P-603)
- PC Interface Cable (Part # 7250P-320)
- Boiler Caster Kit (Part # 7350P-604)
- Mod Con Condensate Neutralizer (Part # 7350P-611)
- Flow Switch Kit (Part #7350P-605 Mod Con 500/850, Part #7350P-606 Mod Con 300)

MOD CON Dimensional Information

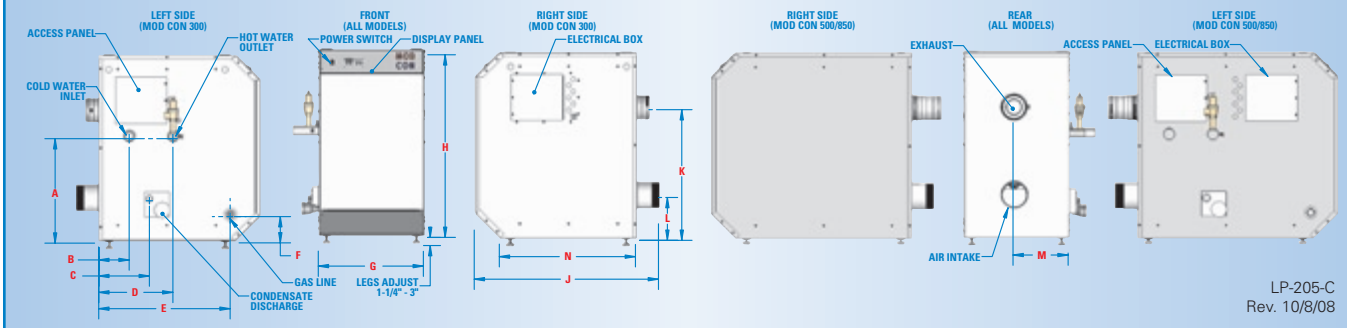

LP-205-C
Rev. 10/8/08

Model	A	B	C	D	E	F	G	H	J	K	L	M	N
MOD CON 300	20.00″	6.25″	10.25″	14.50″	26.00″	5.15″	20.50″	36.00″	35.75″	25.50″	8.25″	10.50″	26.50″
MOD CON 500	20.00″	6.25″	13.25″	14.50″	33.30″	5.15″	20.50″	36.00″	41.75″	25.50″	8.25″	10.50″	34.00″
MOD CON 850	20.00″	6.75″	16.25″	18.75″	43.50″	20.00″	20.50″	36.00″	66.75″	25.50″	8.25″	10.50"	57.50"

PLEASE NOTE: ALL DIMENSIONS ARE APPROXIMATE AND HEIGHTS DO NOT INCLUDE ADJUSTABLE LEGS.

Model	BTU / hr Input Low Fire	Gross Output BTU / hr	Net I=B=R BTU / hr	Thermal Efficiency	Boiler Water	Supply/ Return Conn.	Gas Conn.	Vent Dia.	Ship Wt.	High Fan Speed	Low Fan Speed	Ignition
MOD CON 300	60,000–301,000	283,000	245,000	94%	2.9	1-1/2"	1-1/4"	4"	410	5400	1500	3000
MOD CON 500	100,000–500,000	470,000	409,000	94%	4.2	2"	1-1/2"	4"	505	6930	1250	3000
MOD CON 850	170,000–850,000	799,000	695,000	94%	5.8	2"	2"	6"	580	5500	1250	3000

MOD CON Vertical Venting

Roof Venting with Stainless Steel (AL294C)

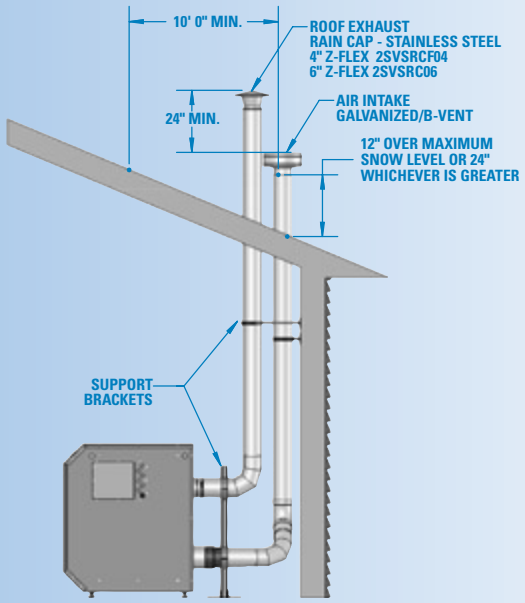

Sidewall Venting with Stainless Steel

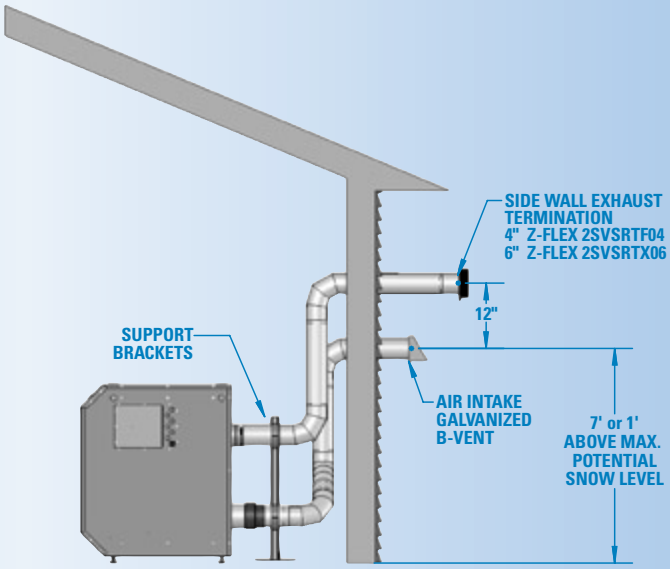

Note:

Vent must be at least 12″over maximum snow level or 24″, whichever is greater – check with local code requirements

General Note:

All vent pipes must be glued, properly supported and the exhaust must be pitched a minimum of ¼" per foot back to the heater (to allow drainage of condensate).

LP-205-Y
Rev. 7/07/08

MOD CON Single Boiler Space Heating with Indirect Priority

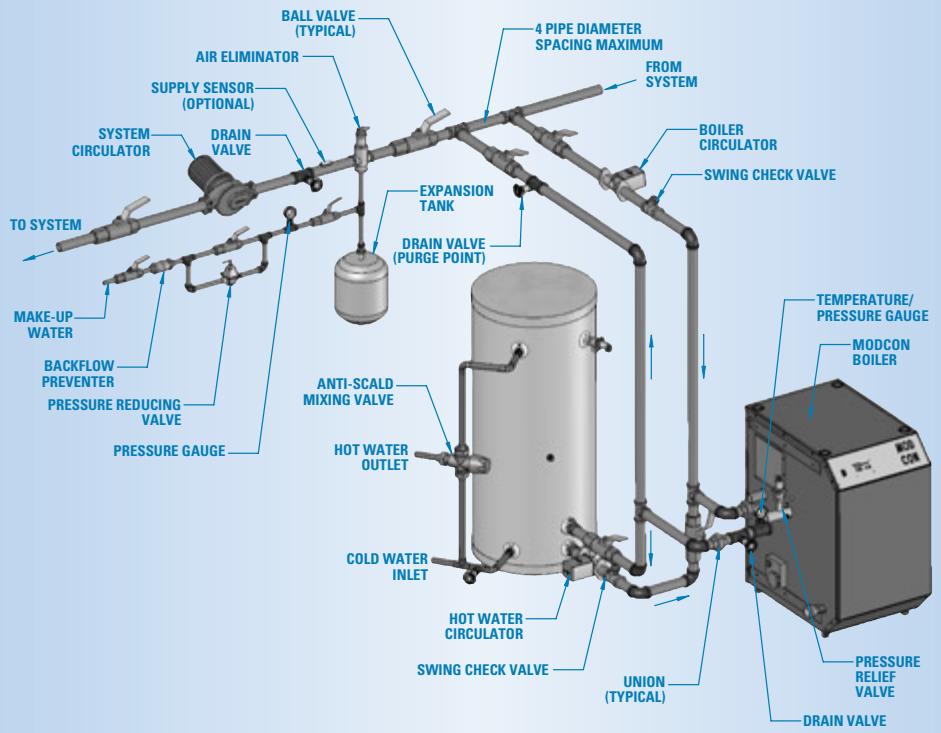

LP-205-L
Rev. 10/29/08

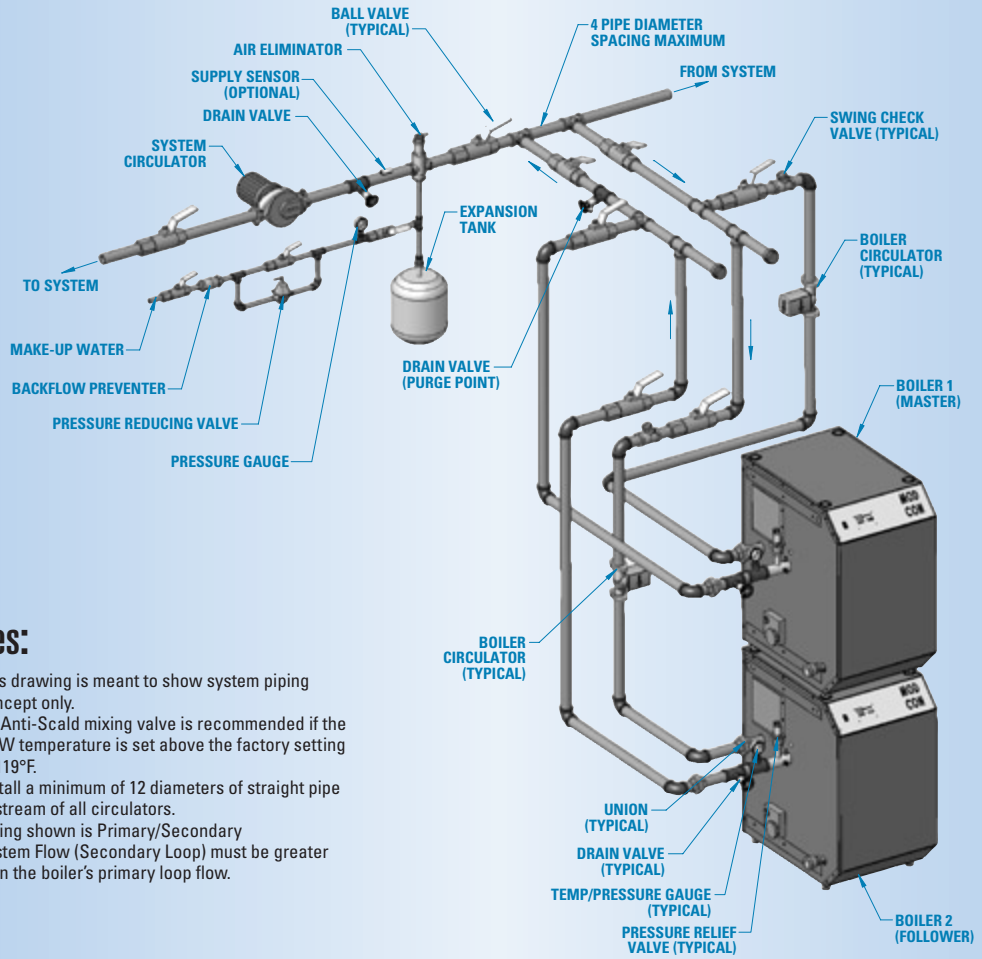

Notes:

1. This drawing is meant to show system piping concept only.
2. An Anti-Scald mixing valve is recommended if the DHW temperature is set above the factory setting of 119°F.
3. Install a minimum of 12 diameters of straight pipe upstream of all circulators.
4. Piping shown is Primary/Secondary
5. System Flow (Secondary Loop) must be greater than the boiler's primary loop flow.

LP-205-CC
Rev. 7/8/08

PRINTED WITH 100% WIND ENERGY
© 2008 Heat Transfer Products, Inc.
www.htproducts.com

Appendix C- Wood Pellet Boiler Data

PELLEMATIC®

performance range:

from 11,500 to 41,000 BTU/hr
from 17,000 to 51,000 BTU/hr
from 20,500 to 68,300 BTU/hr

from 27,300 to 85,300 BTU/hr
from 34,000 to 109,500 BTU /hr

from 37,500 to 123,000 BTU/hr
from 51,000 to 164,000 BTU/hr
from 58,000 to 191,000 BTU/hr

from 37,500 to 382,000 BTU/hr (tandem Systems)

from 75,000 to 764,500 BTU/hr (cascade of 4)

TOP: automatic ash compression system

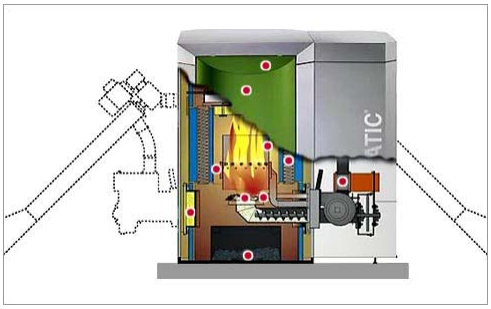

Boiler

		PE12	PE15	PE20	PE25	PE30	PE36	PE48	PE56
Boiler - type									
Boiler - Nominal capacity	BTU/hr	41,000	51,000	68,300	85,300	109,500	123,000	164,000	191,000
Breadth - total	B Inch	39.9	44.5	44.5	46	46	51	51	51
Breadth - Boiler	C Inch	27.6	27.6	27.6	29.8	29.8	32.5	32.5	32.5
Height - Boiler	H Inch	42.9	42.9	42.9	50.8	50.8	61.1	61.1	61.1
Height - Vacuum system execution	D Inch	59.8	59.8	59.8	67.3	67.3	73	73	73
Depth - boiler	T Inch	32	32	32	34.3	34.3	40	40	40
Depth - burner cladding	V Inch	20	20	20	20	20	20	20	20
Forward and Return - dimension	Inch	1	1	1	5/4	5/4	2	2	2
Forward and Return - height of connection	A Inch	35.6	35.6	35.6	43.7	43.7	52	52	52
Smoke Tube - diameter	R Inch	5	5	6	6.3	6.3	7	7	7
Smoke Tube - height of connection	E Inch	25.4	25.4	25.4	33.2	33.2	40.9	40.9	40.9

- **More than 27,000 European customers rely on the ÖkoFEN Pellematic System**

Pictures Pellematic:

Quelle: http://www.oekofen.co.uk DATUM: 20.06.2009

ÖkoFEN » Products » Pellematic

PELLEMATIC® "classic" or PELLEMATIC MINI

performance range:
from 2 to 8 kW
from 4 to 12 kW
from 5 to 15 kW
from 6 to 20 kW
from 8 to 25 kW
from 11 to 36 kW
from 15 to 48 kW
NEW: 17 to 56 kW
from 11 to 112 kW (Tandem Systems)
from 22 to 224 kW (cascade of 4)

TOP: automatic ash compression system

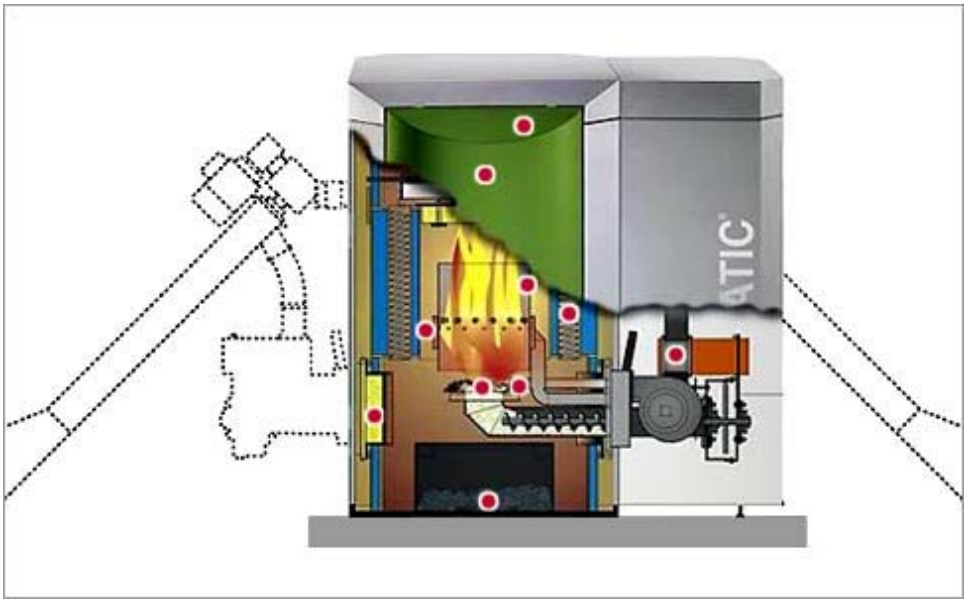

Boiler

Boiler - type		PE08	PE12	PE15	PE20	PE25	PE30	PE36	PE48	PE56
Boiler - Nominal capacity	kW	8	12	15	20	25	30	36	48	56
Breadth - total	B mm	1013	1130	1130	1130	1186	1186	1297	1297	1297
Breadth - Boiler	C mm	6451	700	700	700	756	756	862	862	862
Height - Boiler	H mm	1066	1090	1090	1090	1290	1290	1553	1553	1553
Height - Vacuum system execution	D mm	-	1520	1520	1520	1710	1710	1855	1855	1855
Depth - boiler	T mm	691	814	814	814	870	870	1015	1015	1015
Depth - burner cladding	V mm	430	508	508	508	508	508	508	508	508
Forward and Return - dimension	Inch	1"	1"	1"	1"	5/4"	5/4"	2"	2"	2"
Forward and Return - height of connection	A mm	896	905	905	905	1110	1110	1320	1320	1320
Smoke Tube - diameter	R mm	130	130	130	150	160	160	180	180	180
Smoke Tube - height of connection	E mm	664	645	645	645	844	844	1040	1040	1040

Pellematic Mini for low energy buildings
Pellematic Mini means:

- very low purchase cost
- minimum heating costs
- minimum overall dimensions

The Pellematic Mini is economical, safe and ecological - just like the well tested PELLEMATIC®, only smaller! The new Pellematic Mini was especially developed for homes with a low energy demand such as smaller or very well insulated houses.
Its heat range is from **2 to 8 kW!**

Pictures Pellematic:

Quelle: http://www.oekofen.co.uk DATUM: 20.06.2009

Boiler Data

Boiler - Type		PE08	PE12	PE15	PE20	PE25	PE32	PE36	PE48	PE56
Boiler - Nominal capacity	kW	8	12	15	20	25	32	36	48	56
Breadth - total	B mm	1013	1130	1130	1130	1186	1186	1297	1297	1297
Breadth - Boiler	C mm	645	700	700	700	756	756	862	862	862
Height - Boiler	H mm	1066	1090	1090	1090	1290	1290	1553	1553	1553
Height - Vacuum system	D mm	-	1520	1520	1520	1710	1710	1855	1855	1855
Depth - Boiler	T mm	691	814	814	814	870	870	1015	1015	1015
Depth - burner cladding	V mm	430	508	508	508	508	508	508	508	508
Flow and Return - diameter	Zoll	1"	1"	1"	1"	5/4"	5/4"	2"	2"	2"
Flow and Return - height of connection	A mm	896	905	905	905	1110	1110	1320	1320	1320
Exhaust Tube - diameter	R mm	130	130	130	130	150	150	180	180	180
Exhaust Tube - height of connection	E mm	664	645	645	645	844	844	1040	1040	1040

Boiler:

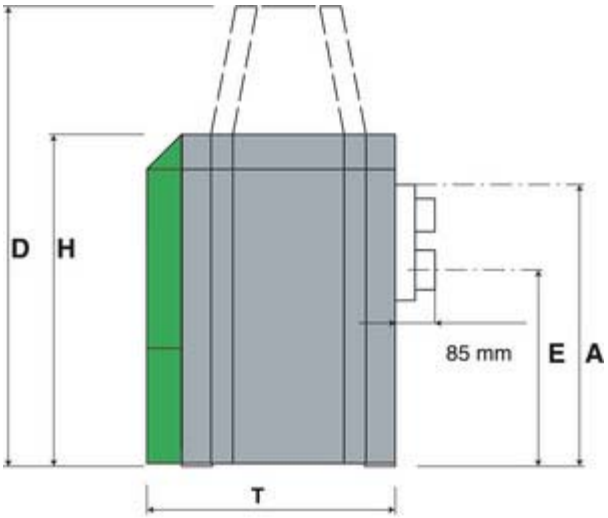

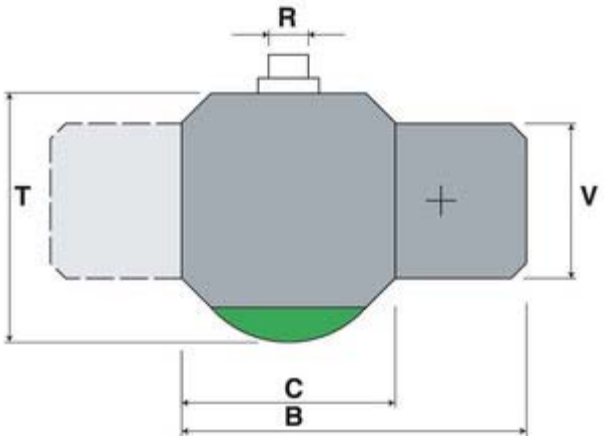

Organic Energy (UK) Ltd, Severn Road, Welshpool, Powys, SY21 7AZ, U.K., Tel. 0044 (0) 845 458 4076 or 0044 (0) 1938 559 222 (local rate), Fax 0044 (0) 845 458 4076, website: www.organicenergy.co.uk

Grain Hopper Tanks

Bulk feed tanks and wet holding bins in a variety of diameters

GSI®

"Your Complete Systems Manufacturer."

Strength & Durability

High tensile steel sidewall sheets, with a galvanized coating provide outstanding strength and durability along with the 2-2/3" (68mm) wide by 1/2" (13mm) deep corrugation and precision formed panel. GSI also provides solid, comfortable access via an optional fully die-formed side ladder with dimpled non-skid rungs.

Legs & Anchors

GSI tanks are supported by our own unique, roll-formed, fully galvanized 6-bend legs (manufactured on GSI's exclusive, computer controlled machinery), providing significantly greater strength than simple angle iron legs and greater corrosion resistance and longer life than painted legs. Roll-formed cross ties and two-piece leg anchor sections, also galvanized, provide strength, stability, support and load transfer.

Wet Holding Bin

Wet holding bins need to be able to support slightly heavier loads than typical ground feed bulk tanks. They are available in 7', 9', 12', 15', 18' and 21' diameters and can be used for temporary storage, adapted to several grain drying and conditioning systems, or can serve as long term storage for properly dried grain. GSI hopper tanks are designed to hold 45 lbs. per cubic foot, with total bin capacities exceeding 150 metric tons (or over 6000 bu.). A 45 degree hopper slope provides optimum material flow for unloading and rounded truss head bolts reduce "bridging" of contents on inner surfaces. Optional view window level indicators can also be added for convenient monitoring of grain loading and unloading.

Ribbed Roofing

GSI manufactures roofs from prime, high tensile, galvanized steel. The higher tensile steel adds up to 20% more strength, with no extra weight, which is critical in clear span roof structural design. Roof eave clearance can be adjusted at the time of installation. Each roll formed roof rib has four supportive bends in the vertical sides for maximum strength. Tall roof ribs are fully double overlapped for moisture resistance and increased strength. The easy to open peak cap provides a large 30" diameter opening for fast filling.

Hopper Bottoms

Tank hoppers are available in three slopes: 45˚, for dry, free flowing grain and 60˚ or 67˚ for harder flowing materials. Hopper panels are die-formed with rounded corners and sealed edges down-turned for a weather-tight fit. In addition, assembly with rounded, truss-head bolts reduces "bridging" of contents on inner surfaces. The "eave", the upper edge where the hopper is joined to the sidewall, is specially die-formed to conform to the shape of the sidewall corrugation (See A.). Most other manufacturers depend on crimping and bolt pressure to force the connection (See B.)...which produces corrosion-prone distortion and "dimpling" of the sidewall. GSI's industry exclusive die-formed eave provides a much tighter seal and smoother flow of material.

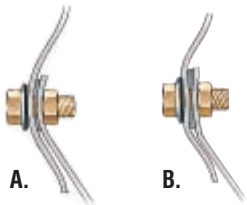

Heavy Duty Boots

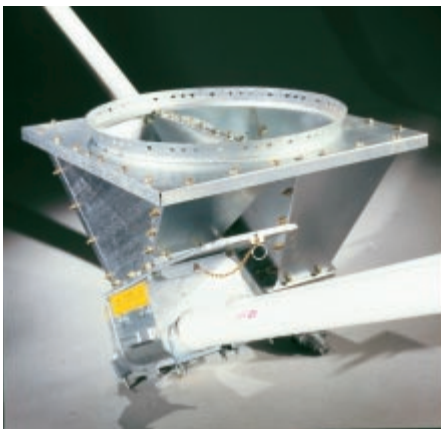

Multiple outlet requirements can be easily handled by our 22" (559mm) all metal boot. This boot, which can be fitted to any GSI grain hopper tank, will allow installation of up to four feed lines in several directions at once. GSI's 16" (406mm) parabolic boot (available in straight drop or 30˚ models) is made from the very latest in ultra high impact polypropylene for greater flexibility, dependability and durability.

Straight Drop Boot

30˚ Drop Boot

Rigid Auger

For your high capacity material handling needs, GSI offers a complete line of Rigid Augers and accessories. Available in diameters 4", 6", and 8", and in lengths from 11' to 21', the GSI Rigid Auger system can be configured to meet your most demanding applications. With capacities up to 2100 bushels per hour, the GSI Rigid Augers can make quick work of any of your material handling jobs. GSI also offers a variety of auger accessories to further enhance the versatility of your material handling system.

Rotary Unloader

Designed to fit below the 22" Maxi-Flo boot, GSI's rotary unloaders are available for 2.2" (55mm), 3" (75mm), 3.5" (90mm) and 5" (125mm) Flex-Flo™ or 4", 6", and 8" rigid auger systems.

Special Tanks

GSI can provide bulk material storage and handling for a variety of applications on and off the farm. From customized discharge heights to high wind and seismic engineering for geographically sensitive locations, GSI can insure that you receive the best configuration to fit your needs. Equipment for microbrewries, pistachio and peanut producers, as well as the aquaculture industry are just a few examples of GSI's ongoing efforts to fill the increasing demand for more productive and cost efficient application-specific systems.

Bulk Feed Tanks

Also there are steeper (60˚ and 67˚) hopper slopes and sealed roofs available for your ground feed handling needs.

Flex-**Flo**™ Flexible Auger Systems

Flex-Flo™ Models

Both tubing and augers are available in four sizes and five models with capacities ranging from 15 lbs. to 220 lbs./minute. Whether it's ground feed, crumble feed, mash, high moisture corn, shelled corn or pellets, GSI has the equipment to handle it. For corn with up to 27% moisture and other hard to flow materials, GSI also offers a Flex-Flo™ High Roughage system which incorporates a special combination of a 3" (76mm) auger in a 3-1/2" (89mm) tube to reduce plugging.

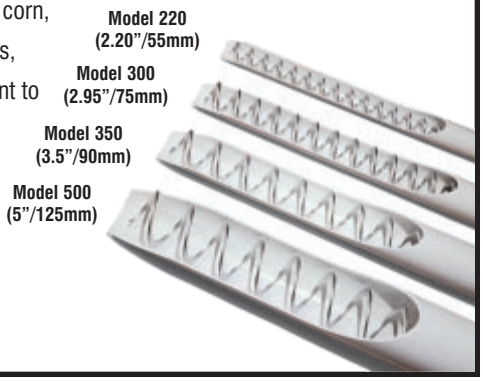

SPECIFICATIONS

Part Number					Maximum Capacity			Overall Height	
Model	Diameter	No. Rings	Angle of Hopper	Bushel	Cubic Feet	Metric Tons	U.S. Tons	Feet	Meters
GHT	7	1	45˚	137	170.09	3.09	3.40	9'10"	3.02
GHT	7	2	45˚	218	271.64	4.93	5.43	12'6"	3.83
GHT	7	3	45˚	300	373.18	6.77	7.46	15'2"	4.65
GHT	7	4	45˚	381	474.73	8.61	9.49	17'10"	5.46
GHT	7	5	45˚	463	576.27	10.46	11.53	20'6"	6.27
GHT	7	6	45˚	545	677.81	12.30	13.56	23'2"	7.09
GHT	9	2	45˚	388	482.73	8.76	9.65	14'2"	4.32
GHT	9	3	45˚	523	650.59	11.80	13.01	16'10"	5.13
GHT	9	4	45˚	658	818.45	14.85	16.37	19'6"	5.94
GHT	9	5	45˚	793	986.32	17.89	19.73	22'2"	6.75
GHT	9	6	45˚	927	1154.18	20.94	23.08	24'10"	7.56
GHT	12	2	45˚	786	946.87	19.34	21.30	16'9"	5.13
GHT	12	3	45˚	1039	1245.30	25.44	28.02	19'5"	5.94
GHT	12	4	45˚	1290	1543.72	31.53	34.73	22'1"	6.76
GHT	12	5	45˚	1542	1842.15	37.64	41.45	24'8"	7.56
GHT	12	6	45˚	1794	2140.57	43.73	48.16	27'5"	8.38
GHT	12	7	45˚	2045	2439.00	49.83	54.88	30'1"	9.20
GHT	15	2	45˚	1340	1617.32	33.04	36.39	19'1"	5.84
GHT	15	3	45˚	1733	2083.61	42.57	46.88	21'9"	6.65
GHT	15	4	45˚	2127	2549.90	52.09	57.37	24'5"	7.46
GHT	15	5	45˚	2520	3016.18	61.52	67.86	27'1"	8.28
GHT	15	6	45˚	2914	3482.47	71.15	78.36	29'9"	9.09
GHT	15	7	45˚	3307	3948.76	80.68	88.85	32'5"	9.91
GHT	15	8	45˚	3700	4415.05	90.20	99.34	35'1"	10.72
GHT	18	2	45˚	2089	2526.99	51.58	56.86	21'6"	6.65
GHT	18	3	45˚	2656	3198.44	65.29	71.97	24'2"	7.36
GHT	18	4	45˚	3222	3869.90	78.99	87.07	26'10"	8.17
GHT	18	5	45˚	3789	4541.35	92.70	102.18	29'6"	8.99
GHT	18	6	45˚	4355	5212.81	106.38	117.29	32'2"	9.80
GHT	18	7	45˚	4922	5884.26	120.09	132.40	34'10"	10.61
GHT	18	8	45˚	5488	6555.72	133.79	147.50	37'6"	11.42
GHT	21	2	45˚	3061	3709.18	75.70	83.44	23'9"	7.24
GHT	21	3	45˚	3832	4623.55	94.36	104.01	26'5"	8.05
GHT	21	4	45˚	4603	5536.32	113.00	124.57	29'1"	8.86
GHT	21	5	45˚	5374	6450.84	131.60	145.13	31'9"	9.68
GHT	21	6	45˚	6145	7364.65	150.30	165.69	34'5"	10.49
BFT	6	1	60˚	111	137.99	2.50	2.76	10'7"	3.25
BFT	6	2	60˚	171	212.60	3.86	4.25	13'3"	4.06
BFT	6	3	60˚	231	287.20	5.21	5.74	15'10"	4.85
BFT	6	4	60˚	291	361.80	6.56	7.24	18'7"	5.69
BFT	7	1	67˚	185	230.09	4.17	4.60	13'6"	4.12
BFT	7	2	67˚	266	331.63	6.02	6.63	16'2"	4.93
BFT	7	3	67˚	348	433.17	7.86	8.66	18'9"	5.75
BFT	7	4	67˚	430	534.72	9.70	10.69	21'6"	6.56
BFT	7	5	67˚	511	636.26	11.54	12.73	24'2"	7.37
BFT	7	6	67˚	593	737.81	13.39	14.76	26'10"	8.18
BFT	9	1	60˚	308	383.88	6.96	7.69	14'1"	4.30
BFT	9	2	60˚	443	551.75	10.01	11.04	16'9"	5.11
BFT	9	3	60˚	578	719.62	13.06	14.39	19'5"	5.92
BFT	9	4	60˚	713	887.48	16.10	17.75	22'1"	6.74
BFT	9	5	60˚	848	1055.34	19.15	21.11	24'8"	7.55
BFT	9	6	60˚	983	1223.21	22.19	24.46	27'5"	8.36
BFT	12	2	60˚	923	1109.27	22.64	24.96	20'6"	6.25
BFT	12	3	60˚	1175	1407.69	28.73	31.67	23'2"	7.06
BFT	12	4	60˚	1427	1706.12	34.82	38.39	25'10"	7.87
BFT	12	5	60˚	1679	2004.54	40.91	45.10	28'6"	8.69
BFT	12	6	60˚	1931	2302.96	47.00	51.82	31'2"	9.50
BFT	12	7	60˚	2184	2602.24	53.12	58.56	33'10"	10.31
BFT	15	2	60˚	1608	1934.95	39.49	43.54	23'11"	7.29
BFT	15	3	60˚	2001	2401.22	49.00	54.03	26'7"	8.10
BFT	15	4	60˚	2395	2867.50	58.52	64.52	29'3"	8.92
BFT	15	5	60˚	2788	3333.77	68.04	75.01	31'11"	9.73
BFT	15	6	60˚	3182	3800.04	77.55	85.50	34'7"	10.54

7' - 9' Grain Hopper Tanks (GHT - 45 degree Hopper)
Designed for the storage of free flowing material having a maximum density of 45 pounds per cubic foot.
Bushel capacities are calculated with no compaction and to full cubic foot capacities.
Weight capacities are calculated at 40 pounds per cubic foot.

12' - 21' Grain Hopper Tanks (GHT - 45 degree Hopper)
Designed for the storage of free flowing material having a maximum density of 45 pounds per cubic foot.
Bushel capacities are calculated with 5% compaction and at a 27-degree angle of repose.
Weight capacities are calculated at 45 pounds per cubic foot.

6' - 9' Bulk Feed Tanks (BFT - 60 & 67 degree Hoppers)
Designed for the storage of free flowing material having a maximum density of 40 pounds per cubic foot.
Bushel capacities are calculated with no compaction and to full cubic foot capacities.
Weight capacities are calculated at 40 pounds per cubic foot.

12' - 15' Bulk Feed Tanks (BFT - 60 & 67 degree Hoppers)
Designed for the storage of free flowing material having a maximum density of 45 pounds per cubic foot.
Bushel capacities are calculated with 5% compaction and at a 27-degree angle of repose.
Weight capacities are calculated at 45 pounds per cubic foot.

Warning! Non-free flowing materials including (but not limited to) soybean meal and meat by-products should not be stored in these tanks due to their inherent nature to bridging. Check with your material supplier on the flowability of your product prior to purchasing a tank. If in doubt about a specific product, contact Grain Systems' engineering department for additional recommendations. Some features are optional and may be available only on certain models. Consult your local GSI dealer for details. All specifications subject to change without notice.

A Division of the GSI Group, P.O. Box 20, 1004 E. Illinois Street, Assumption IL 62510 USA, Ph:217-226-4421; Fax: 800-800-5329
Int'l Fax: 1-217-226-3404 ***www.grainsystems.com***

SWEBO BIOENERGY
FUTURE ENERGY SYSTEMS TODAY

SWEBO ENERGY SYSTEMS

SOLID FUEL BOILER SWEBO P500

- Optimal heat production and low emissions.

Welded steel boiler

The P500 is a solid fuel boiler intended for the burning of wood fuel such as pellets, briquettes, peat and wood chips. It is modified by SWEBO's specifications. The line encompasses four boilers in the output range spanning 100 - 750 kW. The P500 is a welded steel boiler in a 3-zone execution for separate flue gas fans. The boiler is delivered by default with a fully welded back hearth including casting, but is also available in an execution with an open base. The automatic sweeping of the boiler's tube package allows it to constantly maintain a high degree of efficiency. The P500 is in its default execution designed with adapted connection flanges for a front or, alternatively, side connection of a pellet burner or stoking equipment for wood chips.

Automatic sweeping

The P500 is delivered complete with equipment for automatic sweeping. The automatic sweeping system keeps the flue gas tubes constantly clean. The hydraulic unit that manages the cleaning consists of a motor, pump, tank and valve package in one unit, with the controls occurring via time relays.

Automatic sweeping of the boiler's tube package.

SOLID FUEL BOILER SWEBO P500

- Optimal heat production and low emissions.

Construction data	
Pressure	3 bar
Test pressure	4,5 bar
Temperature	110 °c
Material	P265GH, P235GH
Tube thickness	4,0 mm
Insulation	50 mm mineral wool
The boiler is manufactured according to AFS 1990:4 §8	
ASME certification	

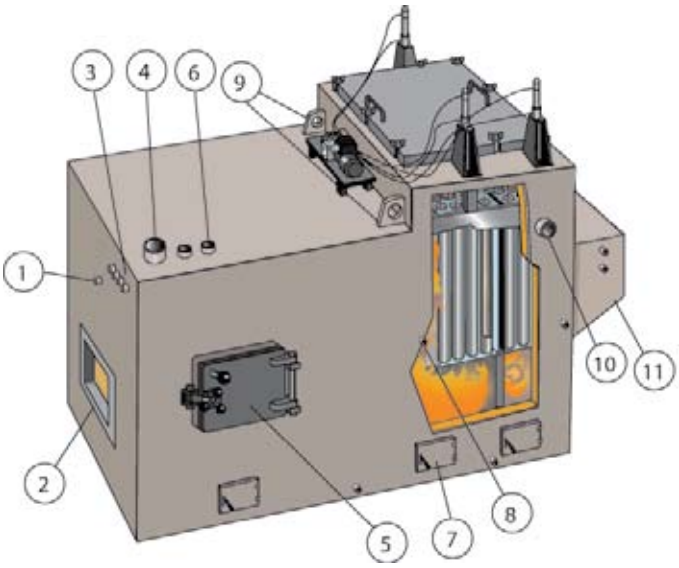

Description, connections

Standard model:
1. Connection over- and underpressure control (DN20)
2. Burner flange
3. Connection temperature regulator (4 x DN15)
4. Forward pipe (Riser)
5. Furnace door (400x300)
6. Connection safety valves (2x)
7. Cleaning port (3x)
8. Draining/cleaning (4 x DN20)
9. Lifting eye bolts
10. Water return
11. Flue gas outlet (450x250) without flue gas fan

Note. Firing equipment for pellets, stoker for chippings etc are not included in deliviery.

Boiler efficiency

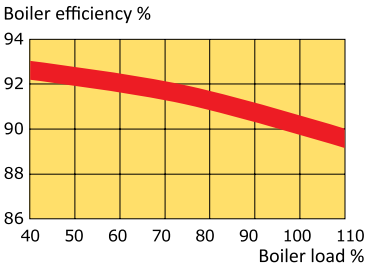

Exhaust temperature

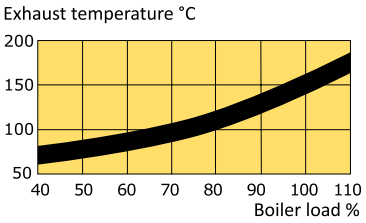

Operation data

- Dry wood fuel such as pellets, briquettes and chips
- Max moisture 30%.
- Lowest floor temperature 70°C
- The standard water temperature is approx. 80°C.
- Return water temperature is min 60°C at Δt max 30°C
- A boiler circuit pump should be installed if there is a risk of a lower return temperture

Water system

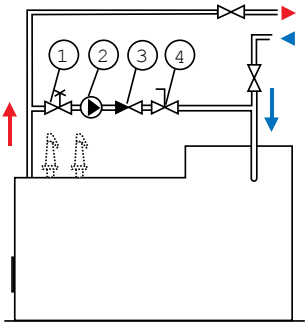

Water resistance

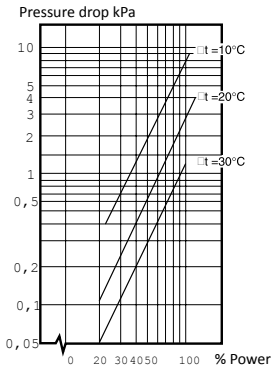

Water system

Through-flow values according to the data plate should always be maintained when the burner is operating.
A boiler circulation system consists of the following:
1. Shutoff valve
2. Boiler circuit pump
3. Check valve
4. Control valve

SOLID FUEL BOILER SWEBO P500

- Optimal heat production and low emissions.

Scope of supply

The standard P500 delivery comprises:

- Metal clad insulated boiler with welded combustion chamber floor and access doors for ash removal
- Automatic flue gas tube cleaning system
- Connection flange for the specified pellet burner or stoker
- Lifting eyes for lifting and transport

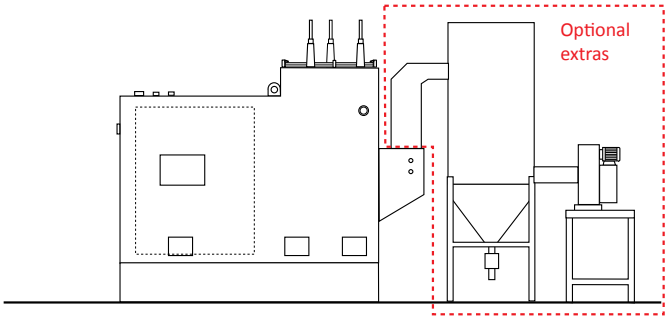

Example of standard supply

Boiler with all welded combustion chamber floor.

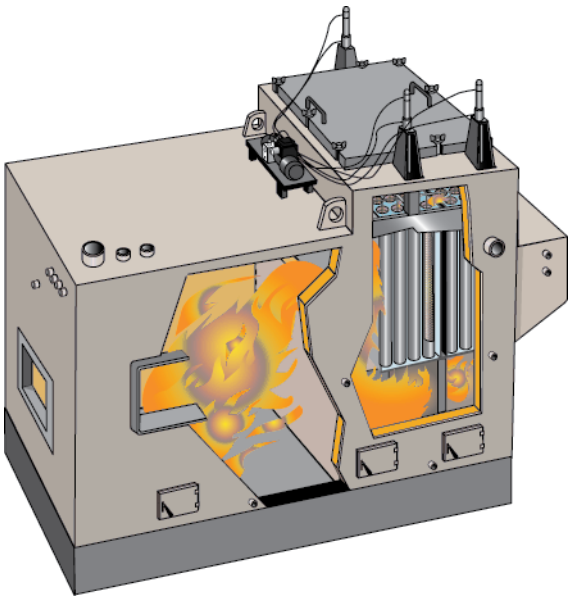

Optional accessories:

- Flue gas fan with single or three phase motor and inverter for variable speed control
- Ash screw for removal of ash from the combustion chamber
- Flue gas cyclone
- Fabricated steel base plate to raise the boiler 700 mm off the ground
- Hinged port for fitting an auxiliary oil or gas fired burner
- Tabs for lifting by jack

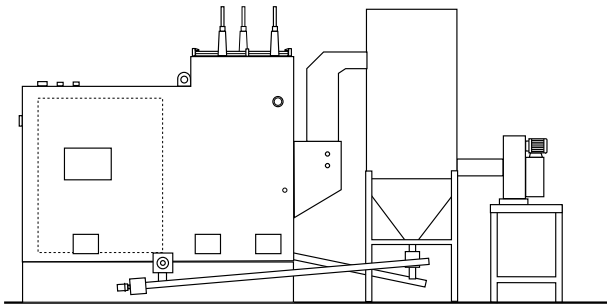

Example of a custom built boiler

Boiler with welded combustion chamber floor and an ash screw.

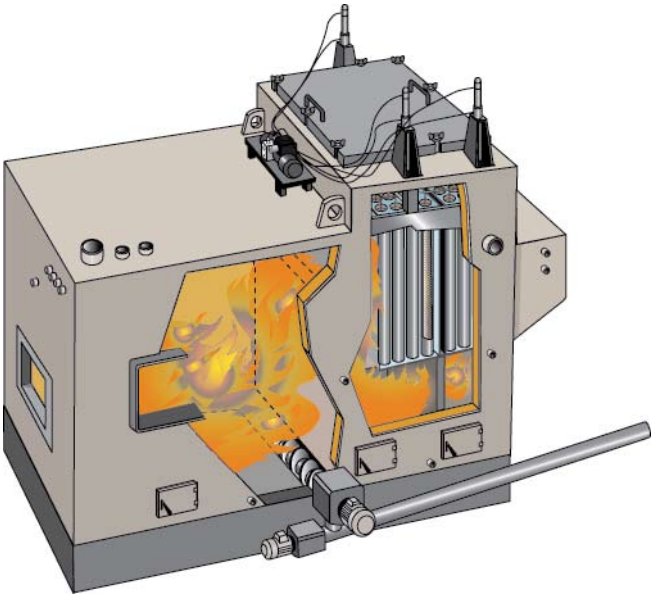

SOLID FUEL BOILER SWEBO P500

- Optimal heat production and low emissions.

Dimensions

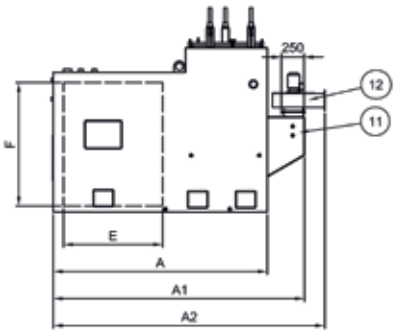

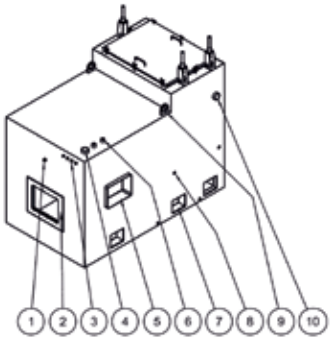

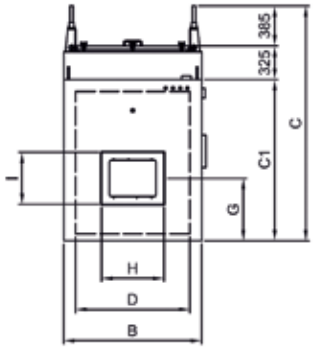

1. Connection over and under pressure control (DN 20)
2. Burner flange
3. Connection temperature regulator (4 x DN 15)
4. Forward pipe (Riser)
5. Furnace door (400 x 300 mm)
6. Connection safety valves (2 x see table)
7. Cleaning poof (3 x)
8. Draining/cleaning (4 x DN 20)
9. Lifting eye bolts
10. Return
11. Flue gas outlet (450 x 250 mm)
12. Flue gas fan (option)

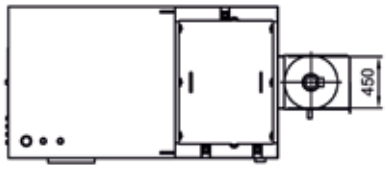

Technical data

P500	Overall dimensions						Combustion chamber			Burner conn pice				Conn	Conn
Boiler size	A	A1	A2	B	C	C1	D	E	F	G	H	I	Weight (kg)	Forw/return pipe (J/K)	Safety value
20	2040	2455	2680	1025	1960	1250	800	800	1070	450	500	500	2000	DN 50 / 2”	DN 32 / 1 1/4”
30	2155	2570	2795	1125	2060	1350	900	900	1170	500	600	500	2500	DN 65 / 2 1/2”	DN 32 / 1 1/4”
45	2370	2785	3010	1325	2260	1550	1100	1100	1370	600	600	500	3000	DN 65 / 2 1/2”	DN 32 / 1 1/4”
50/75	2760	3175	3400	1525	2490	1780	1300	1300	1600	600	600	600	4000	DN 100 / 4”	DN 40 / 1 1/2”

Art.nr	P500 (Type)	Output (kW)	Gas resistance (Pa)	Tot. combustion surface (m2)	Water volume (l)	Water flow/min (m3/h)
4311-1xxx	20	100 – 200	110 – 350	10	800	0,22 – 0,43
4311-2xxx	30	201 – 300	140 – 400	14	900	0,43 – 0,65
4311-3xxx	45	301 – 450	140 – 400	20	1000	0,65 – 0,97
4311-4xxx	50	451 – 500	160 – 600	30	1250	0,97 – 1,10
4311-4xxx	75	451 – 750	160 – 600	30	1250	0,97 – 1,62

Art nr 4311-XXXX

0 = Excl flue gas fan
1 = Incl flue gas fan 400 V 3-phase
(frequency converter, supply voltage 230V/1-phase)

0 = Front-connection with cleaning/inspection ports on right side
1 = Front-connection with cleaning/ inspection ports on left side
2 = Side-connection with cleaning/inspection ports on right side
3 = Side-connection with cleaning/inspection ports on left side

0 = All-welded furnace floor
1 = Open furnace floor
2 = All-welded furnace floor with automatic ash screw

1 = 100 – 200 kW
2 = 201 – 300 kW
3 = 301 – 450 kW
4 = 451 – 750 kW

SWEBO BIOENERGY
FUTURE ENERGY SYSTEMS TODAY

SWEBO BIOJET

SWEBO BioJet 60-500 kW

In developing the water-cooled burner head of the SWEBO BioJet burner, Ariterm has utilised the best information and practical knowledgement available from the research and users.

The SWEBO BioJet burner can be burned with pellet, peat briquette and wood chip. Burners fire grate is durable and long-lasting. The water-cooling in the casing keeps the temperature constant between heating and rest periods. The ceramic fire chamber raises the burning temperature of the flame even to 1100 degrees.

Emissions from SWEBO BioJet are lower than the strictest of today's limits. The BioJet burner can also be shipped as a T model equipped with fire grate maintenance bars, in the 150-500 kW class. The bar model makes lengthens the necessary grate cleaning interval and is especially useful with fuels that produce plenty of ash, such as peat.

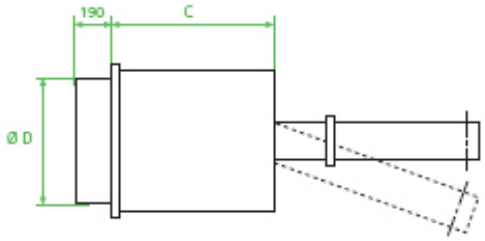

Burner measure (4 bar)

SWEBO BioJet	60 kW	80 kW	120 kW	150 kW	200 kW	250 kW	300 kW	400 kW	500 kW
measure C (mm)	330	420	520	630	710	790	880	1030	1260
diameter D (mm)	335	375	415	460	510	560	630	710	710
weight (kg)	84	106	143	201	280	330	420	519	605

SWEBO BIOENERGY
FUTURE ENERGY SYSTEMS TODAY

FBS AUTOMATIC COMBUSTION CONTROL SYSTEM

- Monitors, optimises and regulates combustion in biofuel and pellet systems.

Operational reliability – a must!

Operational reliability is essential when major energy consumers switch to alternative energy sources, e.g. bioenergy. Often, a bioenergy installation's service or operational staff are not based on site, which means servicing operations can be lengthy and complex due to journeys to and from the installation. Our FBS automatic combustion control system is designed to provide installation owners with trouble-free, power-optimised combustion.

Control system

The control system is designed for biofuel combustion, and is adapted accordingly. The control system platform is designed for Explorer, and the only requirements for regulating and monitoring the installation are an internet connection and an IP number. It can be managed remotely via the internet using a computer of your choice. No expensive or complicated licences or special programs are required to access the control system.

Security

Unique passwords can be created to ensure that facilities are protected against unauthorised access. There are various access levels which determine the operations a user can perform at an installation, from viewing only to a full user profile, depending on the login.

Available support

Because our support staff can access each installation supplied, help is always at hand. We can remotely operate the installation with complete control, and fully monitor everything that happens. This is very important, in particular for teaching and training staff operating the installation on a day-to-day basis (basic training for operational staff is provided at startup).

Advanced but user-friendly

SWEBO FBS is one of the most advanced control systems available, but is also simple and intuitive to use. We have designed the control system to be logically adapted to everyday operation, but it is also intended for those who have the desire and capability to use its complex functions to create a cutting-edge tool for supplying safe heating.

Touch screen

The FBS is always supplied with a 12” colour touch screen and a smaller 2-line display with simple button control. The priority is user-friendly operation.

SWEBO FBS can be supplied for installations from 50 kW to 4 mW.

SWEBO BIOENERGY
FUTURE ENERGY SYSTEMS TODAY

FBS AUTOMATIC COMBUSTION CONTROL SYSTEM

- Monitors, optimises and regulates combustion in biofuel and pellet systems.

Control system interface

Three images of the control system interface are shown on the right. The interface is designed to be as simple and user-friendly as possible.

Details

The control system can regulate using fixed power stages with 0 - 100% power output for maintenance firing and automatic regulation.

Regulates combustion fans, flue gas fan, fuel screws, ash screws. Frequency controlled functions optional.

Co-ordinated database for subsequent evaluation of various scenarios.

Long-term storage of alarms and incidents affecting operation.

Reference value according to external temperature.

Calendar if various temperatures are required depending on the time of day or day of the week.

GSM modem with alarm in plain text, description of the incident, which alarm has been triggered, time and name of installation.

Detailed overview diagram with full information on operating status, temperature, power output, etc.

Easy select functions for simple function connection/disconnection (e.g. electric ignition, automatic regulation).

High level of security and adjustability giving increased availability and operational safety. Inbuilt safety performance for the effect of “human factors” on operation.

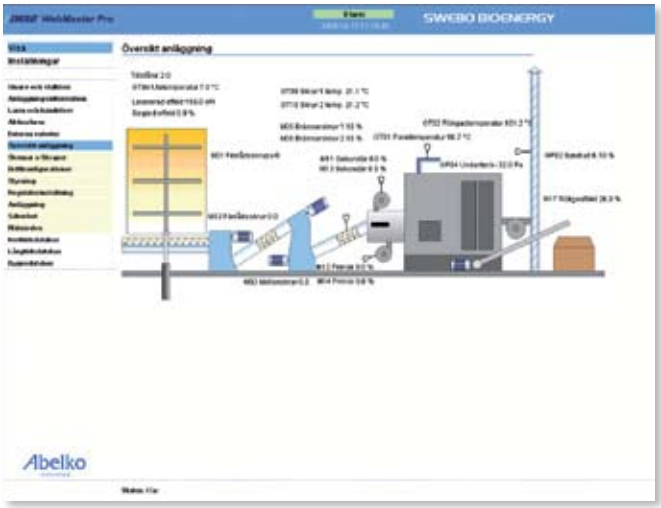

Image 1. Graphical overview of the installation.

Images 2 and 3. Example of interface for controlling the installation.

PHONE +46 (0)921 578 00 • FAX +46 (0)921 176 73 • E-MAIL INFO@SWEBO.COM • WEBSITE WWW.SWEBO.COM

Company History
Our Burner Products

Terminology and Key Figures (pdf)

eurofire product description and part numbers

Pellet Combustion

Links & Testimonials
Contact us

info@ekosystem .se

Products

eurofire - Just what our customers wanted.

Due to ingenious patented design features, such as “Cross-Flow” burning, eurofire pellets burners run like clock-work even when firing lower quality pellets.
The eurofire design allows an extra, extended period of time before cleaning or servicing is needed; this time-saving feature beats our nearest competitor considerably.

We manufacture and supply thousands of pellet-firing burners each year. We continue to expand by supplying first–class products, at a competitive price, to satisfied customers throughout Europe. Please read the comments from some of our customers attached.

A eurofire mounted to boiler showing pellets feed-screw fitted to fuel fall-chute

- Simplicity of design offers continuous, safe and sure operation.
- Extended, operator free, 14 day performance, saves on labour.
- Highly efficient energy production saves on fuel bills.
- Certified by The Swedish Quality and Safety Institute and P stamped.
- Forward flame allows fitting to almost any boiler. Can be retrofitted.
- Easy-on mounting plate makes for simple, fast, trouble free installation of burner to boiler.
- Laboratory tested with boilers such as Baxi etc and comes out top of class.
- Digital PLC test system for easy installation of settings and calibration of fuel consumption rates before firing-up the burner.
- Fine temperature regulator controls between Start and Stop. Means fewer Start and Stop, consequently longer operation times possible when not using an accumulator tank, and less fuel use.
- Designed for future electronic digital upgrading in mind.

This high quality burner is manufactured in several sizes to suit most conditions and needs.

Design Capacity Range: 20-300 kW.
Fuel Type: Pellets 8-10% moisture content.
End User: Detached and semi-detached housing. Commercial buildings. Local central heating plant.

BURNHAM COMMERCIAL
AMERICA'S BOILER COMPANY®

Series 4N
Natural Draft Firebox Boiler

Series 4N Natural Draft Firebox Boiler

Ratings for Oil, Gas or Stoker Firing

4N Boiler Models		63	78	92	107	127	154	180	209	240	277	311	345	397
Gross Output	MBH	245	299	348	403	522	626	724	870	996	1,142	1,278	1,414	21,60
	BHP	7.3	8.9	10.4	12.0	15.6	18.7	21.6	26.0	29.8	34.1	38.2	42.2	65
	Lbs.Stm./Hr.	253	308	359	415	538	645	746	897	1,027	1,177	1,317	1,457	2,226
Net Rating Steam	MBH	190	232	270	313	405	486	562	675	773	887	992	1,098	1,667
	Sq. Ft.	790	970	1,125	1,305	1,690	2,025	2,340	2,815	3,220	3,695	4,235	4,570	6,990
Net Rating Water	MBH	213	260	303	351	454	545	630	757	867	994	1,112	1,230	1,878
Firing Rate - Gas	MBH	306	374	435	504	653	783	905	1,088	1,245	1,428	1,598	1,768	2,700
	Light Oil (140,000 BTU/Gal.)	2.2	2.7	3.1	3.6	4.7	5.6	6.5	7.8	8.9	10.2	11.4	12.6	19.3
	Heavy Oil (150,000 BTU/Gal.)	—	—	—	—	—	—	—	—	—	—	—	—	18.0
Coal (Stoker)	Lbs./Hr.	25	31	36	41	54	64	74	89	102	117	131	145	222
Heating Surface	Sq. Ft.													
	Fireside	45	55	64	74	96	115	133	153	183	210	235	260	397
	Waterside	47	57	67	77	100	120	139	160	193	221	247	274	429
Furnace Volume	Cu. Ft.	8.8	10.7	12.6	14.6	18.3	21.9	25.3	29.1	34.7	39.7	44.4	49.1	58.9
Heat Release	MBH/Cu. Ft.	34.8	35.0	34.5	34.5	35.7	35.8	35.8	37.4	35.9	36.0	36.0	36.0	45.8
Water Content Gals.														
	Steam	67	83	96	113	133	149	171	197	209	239	267	295	421
	Water	92	114	134	156	168	200	231	267	283	323	362	401	520
Approx. Dry Weight Lbs.		1,500	1,700	1,900	2,200	2,500	2,800	3,100	3,400	3,900	4,300	4,900	5,200	6,500
Approx. Weight Full Lbs.														
	Steam	2,055	2,390	2,700	3,140	3,605	4,040	4,525	5,040	5,635	6,285	7,120	7,650	10,005
	Water	2,265	2,650	3,020	3,500	3,895	4,465	5,025	5,620	6,250	6,985	7,910	8,535	10,830

4N Boiler Models		463	563	662	827	993	1157	1323	1654	1985	2315	2645	3075
Gross Output	MBH	2,519	3,063	3,601	4,499	5,402	6,294	7,197	8,998	10,798	12,594	14,389	16,738
	BHP	75	92	108	134	161	188	215	269	323	376	430	500
	Lbs.Stm./Hr.	2,596	3,156	3,712	4,636	5,567	6,484	7,417	9,273	11,129	12,979	14,829	17,250
Net Rating Steam	MBH	1,956	2,378	2,796	3,493	4,194	4,887	5,588	6,986	8,384	9,778	11,172	12,989
	Sq. Ft.	8,150	9,910	11,650	14,555	17,475	20,360	23,280	29,110	34,930	40,740	46,550	54,120
Net Rating Water	MBH	2,190	2,663	3,131	3,912	4,697	5,473	6,258	7,824	9,390	10,951	12,512	14,554
Firing Rate - Gas	MBH	3,149	3,829	4,501	5,624	6,753	7,868	8,996	11,248	13,498	15,743	17,986	20,923
	Light Oil (140,000 BTU/Gal.)	22.5	27.3	32.1	40.2	48.2	56.2	64.3	80.3	96.4	112.5	128.5	149.5
	Heavy Oil (150,000 BTU/Gal.)	21.0	25.5	30.0	37.5	45.0	52.5	60.0	75.0	90.0	104.9	120.0	139.5
Coal (Stoker)	Lbs./Hr.	258	314	369	461	554	646	738	923	1,108	1,292	1,476	1,717
Heating Surface	Sq. Ft.												
	Fireside	463	563	662	827	993	1,157	1,323	1,654	1,985	2,315	2,645	3,075
	Waterside	500	608	715	893	1,072	1,250	1,429	1,786	2,143	2,500	2,857	3,321
Furnace Volume	Cu. Ft.	68.0	89.3	104.7	115.6	139.2	160.7	186.5	234.0	301.6	348.6	383.8	505.6
Heat Release	MBH/Cu. Ft.	46.3	42.9	43.0	48.7	48.5	49.0	48.2	48.1	44.8	45.2	46.9	41.4
Water Content Gals.													
	Steam	492	602	712	761	925	1,050	1,227	1,443	1,720	1,979	2,173	2,814
	Water	607	740	875	1,003	1,220	1,330	1,554	1,826	2,147	2,473	2,718	3,665
Approx. Dry Weight Lbs.		8,000	8,500	10,100	12,300	13,300	16,600	18,600	21,700	26,500	32,800	37,500	48,200
Approx. Weight Full Lbs.													
	Steam	12,100	13,515	16,030	18,630	21,005	25,340	28,815	33,710	40,815	49,270	55,590	71,630
	Water	13,055	14,665	17,390	20,645	23,455	27,675	31,540	36,900	44,370	53,385	60,120	78,710

All models have 3 inch diameter tubes—except 3075 has 2-1/2 inch tubes

Series 4N — Models 63 - 662

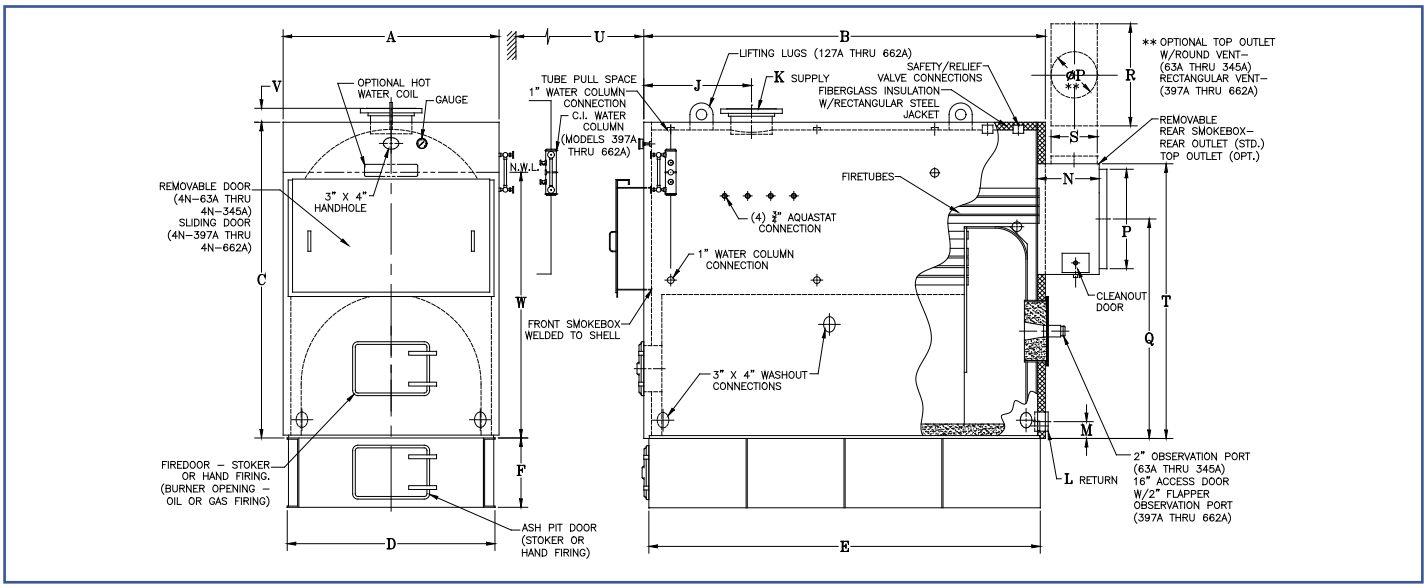

Dimensions

4N Boiler Models	63	78	92	107	127	154	180	209	240	277	311	345	397	463	563	662
A - Boiler Width	30-1/4	30-1/4	30-1/4	30-1/4	35-7/8	35-7/8	35-7/8	35-7/8	44-5/8	44-5/8	44-5/8	44-5/8	52-1/4	52-1/4	56	56
B - Boiler Length	30	37	43-1/2	50-1/2	42-1/2	51	59	68	55	63	70-1/2	78	76-3/4	89-1/4	100-3/8	118-1/4
C - Boiler Height	52-1/8	52-1/8	52-1/8	52-1/8	60-1/2	60-1/2	60-1/2	60-1/2	67-1/2	67-1/2	67-1/2	67-1/2	79-1/4	79-1/4	82	82
D - Base Width	29-3/4	29-3/4	29-3/4	29-3/4	35-1/8	35-1/8	35-1/8	35-1/8	43-7/8	43-7/8	43-7/8	43-7/8	50-1/8	50-1/8	54	54
E - Base Length	30-1/2	37-1/2	44	51	43	51-1/2	59-1/2	68-1/2	55-1/2	63-1/2	71	78-1/2	78-1/8	90-5/8	101-3/4	119-5/8
*F - Base Height	15	15	15	15	18	18	18	18	18	18	18	18	18	18	18	18
G - Front Smoke Box Height	22-3/4	22-3/4	22-3/4	22-3/4	24-7/8	24-7/8	24-7/8	24-7/8	30-5/8	30-5/8	30-5/8	30-5/8	33-5/8	33-5/8	36-3/4	36-3/4
H - Front Smoke Box Depth	6-1/2	6-1/2	6-1/2	6-1/2	7-1/2	7-1/2	7-1/2	7-1/2	8-1/2	8-1/2	8-1/2	8-1/4	8-1/4	8-1/4	9-3/4	9-3/4
J - Supply Location	12	12	12	12	15	15	15	15	18	18	18	18	26	26	26	26
**K - Supply Size	4	4	4	4	6	6	6	6	6	8	8	8	8	10	10	10
L - Return Size	3	3	3	3	4	4	4	4	4	4	4	4	4	4	4	4
M - Return Location	3-1/2	3-1/2	3-1/2	3-1/2	4	4	4	4	4	4	4	4	4-3/8	4-3/8	4-3/8	4-3/8
N - Smoke Box Depth - Top Rear	8 16-1/2	8 16-1/2	8 16-1/2	8 16-1/2	9 20-1/2	9 20-1/2	9 20-1/2	9 20-1/2	10 22-1/2	10 22-1/2	10 22-1/2	10 22-1/2	16 16	16 16	16 16	16 16
P - Vent Collar Diameter	14	14	14	14	18	18	18	18	20	20	20	20	20	24	26	28
Q - Rear Vent Collar Height	33-7/8	33-7/8	33-7/8	33-7/8	40	40	40	40	46	46	46	46	51-1/2	51-1/2	52-3/8	52-3/8
R - Smoke Box Collar Width Top Vent	—	—	—	—	—	—	—	—	—	—	—	—	35-1/4	35-1/4	42-1/2	42-1/2
S - Smoke Box Collar Depth Top Vent	—	—	—	—	—	—	—	—	—	—	—	—	10	13	12	13
T - Top Vent Collar Height	41-7/8	41-7/8	41-7/8	41-7/8	49-1/8	49-1/8	49-1/8	49-1/8	57	57	57	57	64	64	66-7/8	66-7/8
U - Tube Pull Space	32	39	45-1/2	52-1/2	44-1/2	53	61	70	57	65	72-1/2	80	81	94	105	23
V - Supply Fitting Height	1-5/8	1-5/8	1-5/8	1-5/8	3-3/8	3-3/8	3-3/8	3-3/8	3-3/8	3-3/8	3-3/8	3-3/8	3-1/2	3-1/2	3-5/8	3-5/8
W - Normal Water Line Height	40-3/4	40-3/4	40-3/4	40-3/4	48-1/2	48-1/2	48-1/2	48-1/2	55	55	55	55	66-3/16	66-3/16	69	69

*Oil, Gas, Stoker Only - See note below rating table for hand-fired boilers.
**4" is IPS female thread, 6" and larger are flanged
Specifications, dimensions data subject to change without notice.

Eurofire 100
Burnham
C-20

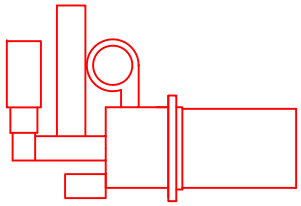

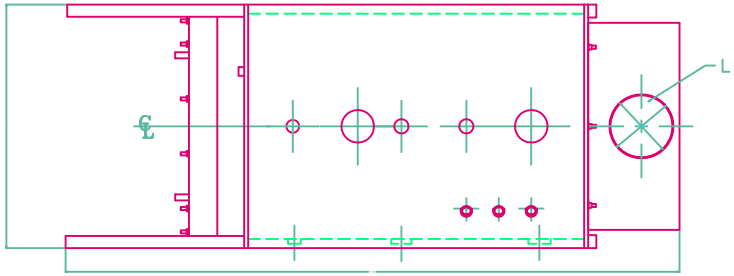

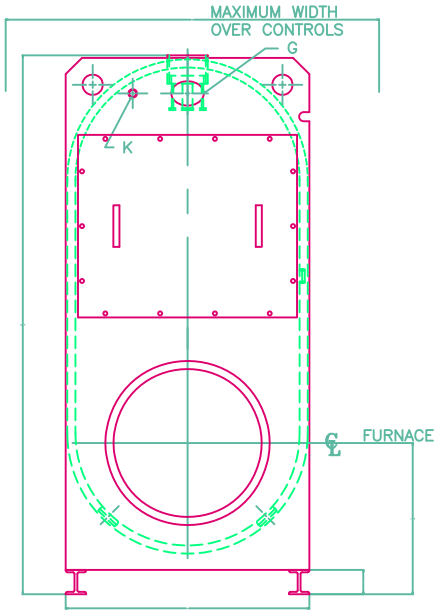

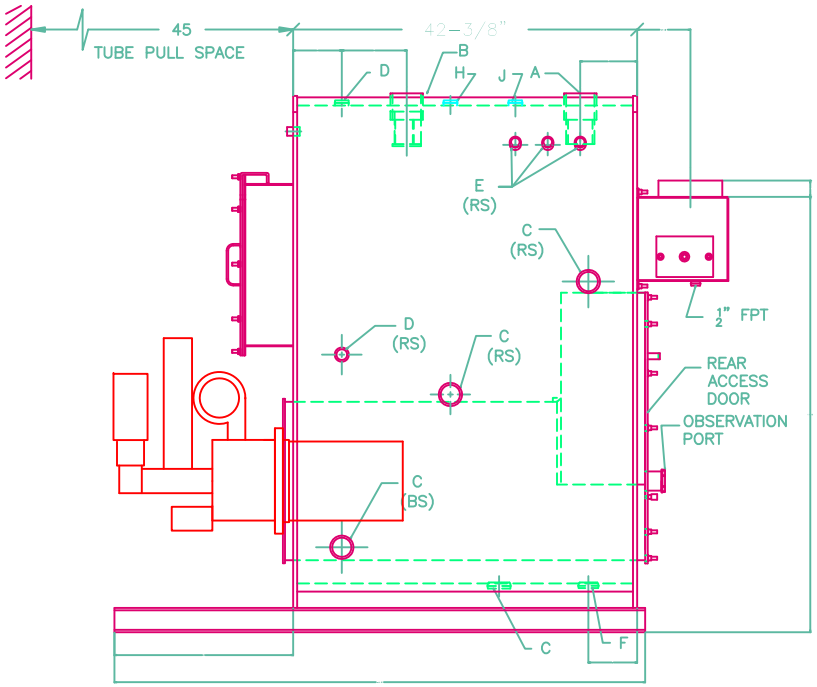

Eurofire 60/
Burnham

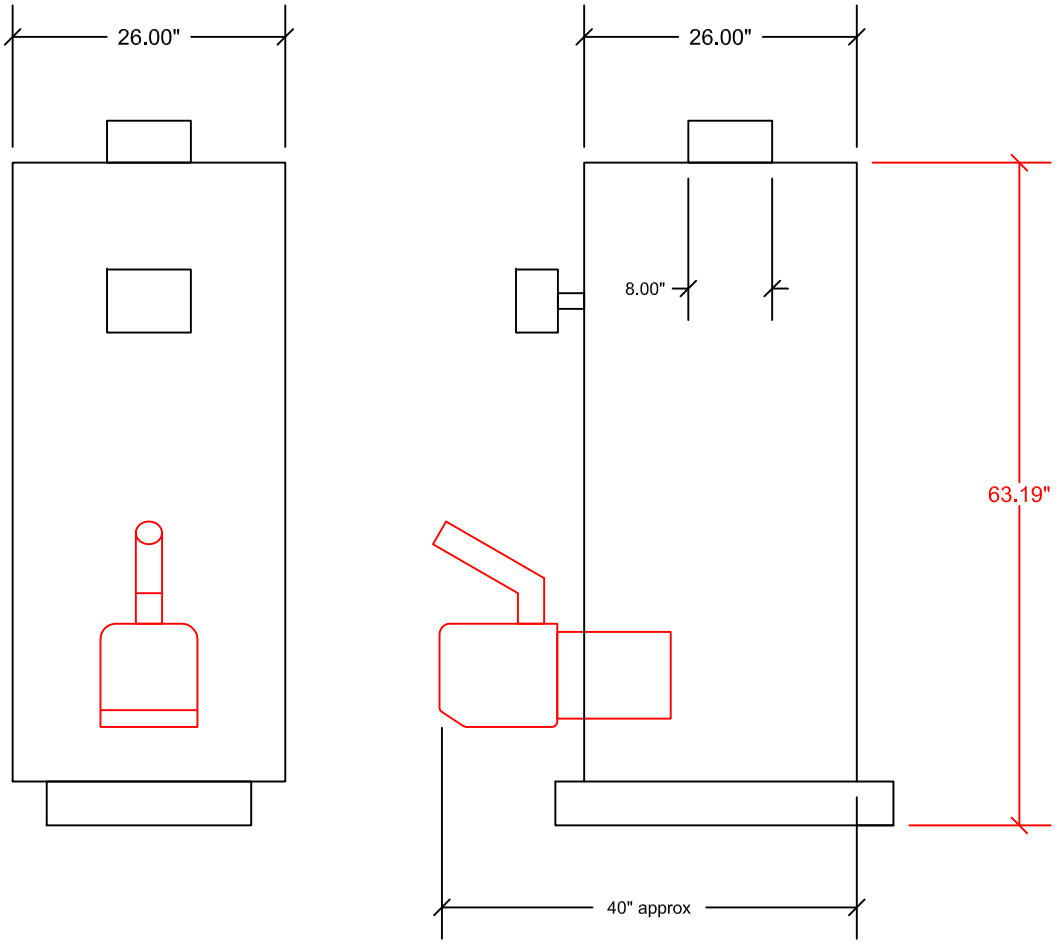

BIOHEAT USA™
Innovative Leaders in Alternative Heating Solutions

COMING FALL 2009

IN THE FINEST TRADITION OF TARM USA

froling

P4

Pellet Boiler

P4

Fröling P4 Applications

- add on to your existing fossil-fuel heating system as the primary heat source
- can provide domestic hot water
- may be used in hydrolic heating systems such as radiant floor, baseboard and hydro-air

Pellet Boiler

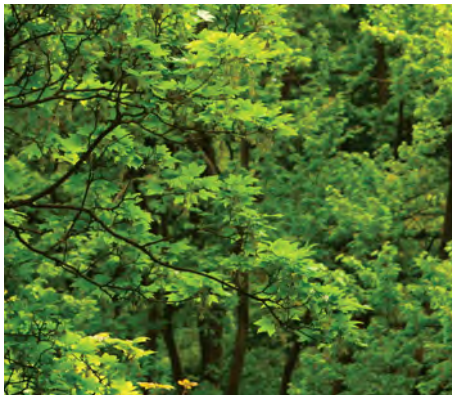

Independence and Self-reliance

Fröling P4 boilers provide a convenient, safe and environmentally responsible way to heat your home and hot water with wood pellets. P4 homeowners are assured of unusually high heating efficiency, low heating costs, and use of an abundant, locally available, renewable fuel. With its ingenious, fully automated operation, this boiler is amazingly easy to use.

Innovation

- Pneumatic pellet feed is ideally suited for bulk fuel applications, although the P4 may easily be used with bagged fuel.
- Variable speed induced draft fan ensures optimal fuel-to-air ratio.
- Incoming combustion air temperature is raised with an integrated pre-heating system.
- Multiple-pass heat exchanger and automatic heat exchange cleaning provide maximum efficiency and exceptional fly ash separation.
- Integrated storage tank control.
- Rated outputs from 36kBTU/hr to 130kBTU/hr.
- Exhaust temperatures under 250°F.
- Must be installed with a moderately sized buffer tank to reduce on/off cycling for optimal efficiency.
- Ash separation to two drawers.
- Virtually silent operation.

Bulk Delivery

As the North American pellet market matures, more and more people are able to take advantage of bulk fuel delivery. With bulk delivery, a pellet fuel truck delivers several tons of loose pellets to your home fuel storage bin or silo. The pneumatic feed device built into the P4 automatically delivers these pellets to your boiler as needed. The convenience of fossil fuel delivery with the economic and environmental benefits of biomass is what some would call the ultimate solution for your home heating needs.

For those of us who do not have access to bulk pellet delivery, the P4 may easily be used with bagged fuel.

About BioHeatUSA

BioHeatUSA™, formerly Tarm USA, is a third-generation, family-owned business that has pioneered the sales and service of residential central heating equipment in North America for over 30 years. BioHeatUSA's primary objective is to offer innovative home heating solutions, along with a significant commitment to consumer education and environmental awareness. Exclusive partnerships with ISO 9001 certified manufacturers allows BioHeatUSA to offer products with operational reliability, unique firing efficiency, and to promote the clean burning of carbon-cycle biomass that is critical to the lowering of net greenhouse gas emissions.

About Fröling

Founded in 1961, Fröling is a family-owned company located in Grieskirchen, Austria. A pioneer in wood-fired heating systems, Fröling has devoted decades of intensive R&D to the study of maximum energy efficiency.

Pellet Storage Systems

There are several options available for pellet storage:

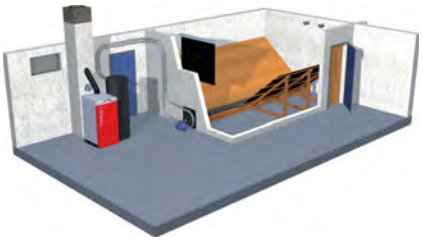

Auger/pneumatic—ideal for rectangular rooms with front-end removal. Complete emptying guaranteed due to deep and horizontal position of the delivery screw. Use with the suction system for flexible boiler setup.

Bag silo—flexible, simple and easy to assemble. Dustproof and flood proof, this system can be installed outside with the addition of rain and sun covers.

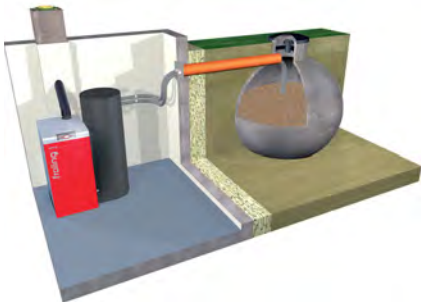

Underground feeder tank—buried outside and feeds pellets to the boiler via suction pipe within a hollow pipe that runs from the tank to the building. Filling takes place through a shaft installed above the pellet tank.

Features

- 92-95% overall efficiency[1]
- automatic ignition
- automatic sliding grate in combustion chamber
- insulated cleaning door for heat retention
- soundproofing for almost silent operation

[1] as per Austrian efficiency test protocol

Advantages

The P4's compact design allows for easy positioning, even in a confined space. The disassembled unit fits through a 36" door. It arrives fully wired and ready for use. An integrated silencer ensures quiet operation.

How it Works

The P4 represents the most advanced residential pellet boiler technology available. Fully automatic ignition, coupled with a programmable user interface, automatic fuel feed and automatic ash removal means the P4 is extremely easy to use and requires very little maintenance.

Lambdatronic P 3200 control system

This large, clear control unit with an adjustable viewing angle.

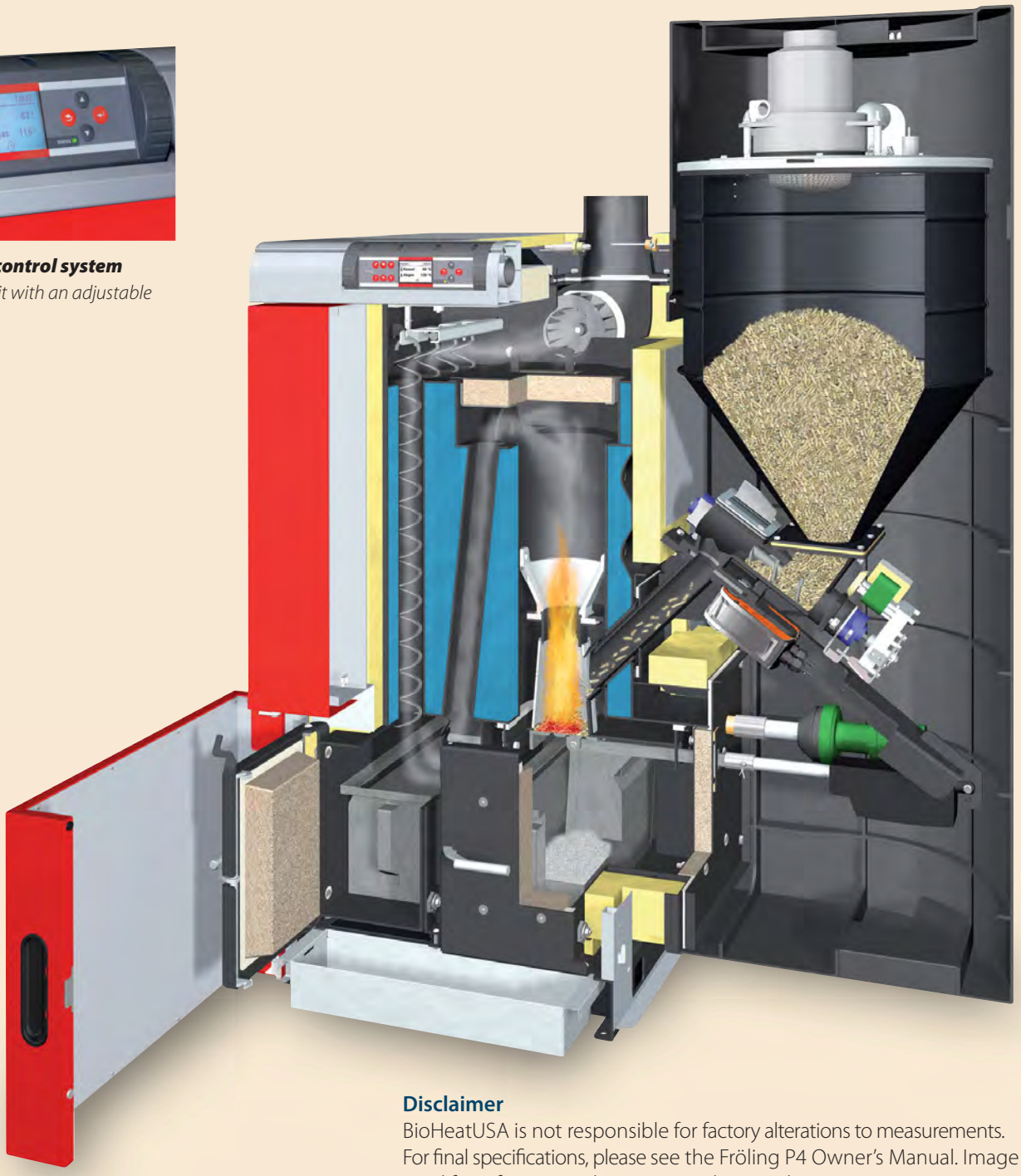

Disclaimer

BioHeatUSA is not responsible for factory alterations to measurements. For final specifications, please see the Fröling P4 Owner's Manual. Image used for informational purposes only. Actual appearance may vary.

BIOHEATUSA™
Innovative Leaders in Alternative Heating Solutions

Listed Appliance

TÜV AUSTRIA

4 Britton Lane | P.O. Box 285 | Lyme, NH 03768 | 800.782.9927 | info@bioheatusa.com | www.bioheatusa.com

Fröling sets new international standards for technology and design within their Austrian facility.

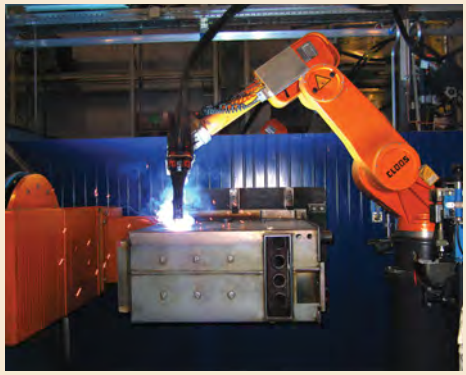

State-of-the-art robotics technology within Fröling's manufacturing plant.

European innovation extends to every facet of Fröling's state-of-the-art facilities.

Technical Data		Model 8	Model 15	Model 20	Model 25	Model 32	Model 38
Rated heat output	BTU/hr	35,800	50,800	68,200	85,300	109,000	129,650
Rated heat output	kW	10.5	14.9	20.0	25.0	32.0	38.0
Heat output range	kW	3.1-10.5	3.1-14.9	6-20.0	7.5-25.0	8.9-32.0	8.9-38.0
Electrical power consumption (@240V)*	W	96	123	110	110	110	110
Water capacity	US gallons	18.5	18.5	21	21	33	33

*Numbers shown are normal operating figures. Peak intermittant consumption is higher.

Installation Data		Model 8	Model 15	Model 20	Model 25	Model 32	Model 38
Boiler							
length[1]	inches	29⅛	29⅛	29⅛	29⅛	29⅛	29⅛
length w/induced draft fan	inches	36⅝	36⅝	36⅝	36⅝	36⅝	36⅝
width[2]	inches	23⅝	23⅝	30⅜	30⅜	32¾	32¾
width w/support	inches	27½	27½	34¼	34¼	36¾	36¾
width w/feed cyclone	inches	46⅝	46⅝	53⅜	53⅜	55¾	55¾
height[3]	inches	50⅜	50⅜	50⅜	50⅜	56⅜	56⅜
height w/feed cyclone	inches	65⅜	65⅜	65⅜	65⅜	74⅞	74⅞
Boiler dry weight[4]	pounds	706	706	882	882	1036	1036
Flue collar height	inches	53⅛	53⅛	53⅛	53⅛	60¼	60¼
Flue pipe diameter	inches	5	5	5	5	6	6

[1] Corresponds to the minimum poitioning length.
[2] Width of the boiler including support for positioning unit. Corresponds to the minimum positioning length after removing the stoker fitment, suction cyclone and positioning unit.
[3] Corresponds to the minimum positioning height after removing the stoker fitment, suction cyclone and positioning unit.
[4] Specified weight refers to the boiler without ash removal module.

BTEC Biomass Thermal Energy Council

RPA Radiant Panel Association

HPBA Hearth, Patio & Barbecue Association

FSC Recycled
Supporting responsible use of forest resources
www.fsc.org Cert no. SW-COC-002058
© 1996 Forest Stewardship Council
100%

Appendix D- Solar Domestic Hot Water Data

Integrated Energy Systems, PLLC
Site Report

Report Name	Gardiner City Hall
Report Date	7/26/2009 10:23:57 PM
Declination	-16d 20m
Location	GARDINER, ME 04345
Lat/Long	44.297 / -69.797
Weather Station	Augusta AP, ME, Elevation: 351 Feet, (44.317/-69.800)
Site distance	1 Miles
Report Type	Ecological
Array Type	Fixed
Tilt Angle	44.30 deg
Ideal Tilt Angle	43.70 deg
Azimuth	180.00 deg
Ideal Azimuth	180.00 deg
Layout Configuration	SinglePicture
Layout Point Count	1

Notes: [None]

Integrated Energy Systems, PLLC 301 Middle Road, Falmouth, ME 207-781-4263
Report generated by SolarPathfinder Assistant Version 4.1.17.0. http://www.solarpathfinder.com

Integrated Energy Systems, PLLC
Solar Site Analysis Report

Image File IMG00070-20090717-1315.jpg

Solar Obstruction Data

Month	Ideal Solar Rad w/o Shading Azimuth=180.0 Tilt=43.7 KWH/m^2/day	Actual Solar Rad w/o Shading Azimuth=180.0 Tilt=44.3 KWH/m^2/day	Actual Solar Rad w/ Shading Azimuth=180.0 Tilt=44.3 KWH/m^2/day
January	2.80	2.80	0.49
February	3.20	3.21	2.07
March	5.50	5.51	4.82
April	4.30	4.29	4.23
May	4.79	4.77	4.72
June	4.19	4.17	4.13
July	4.39	4.37	4.31
August	4.78	4.77	4.69
September	4.61	4.61	4.33
October	2.97	2.97	2.02
November	2.68	2.69	0.74
December	2.11	2.11	0.06
Totals	**46.31**	**46.27**	**36.63**
	Effect: 100%	**Effect: 99.91%**	**Effect: 79.09%**
	Sun Hrs: 3.86	**Sun Hrs: 3.86**	**Sun Hrs: 3.05**

Azimuth/Altitude Data

Azimuth / Altitude (degrees) where North = 180 degrees

-125	3.0	-80	12.0	-35	23.5	10	32.0	55	24.0	100	17.5
-120 (ENE)	**3.0**	-75	15.0	**-30 (SSE)**	**24.5**	15	31.5	**60 (WSW)**	**21.0**	105	17.5
-115	3.5	-70	19.0	-25	23.0	20	30.5	65	19.5	110	17.5
-110	5.5	-65	21.0	-20	21.0	25	28.0	70	21.0	115	17.0
-105	6.0	**-60 (ESE)**	**22.5**	-15	21.5	**30 (SSW)**	**28.0**	75	20.5	**120 (WNW)**	**15.5**
-100	4.5	-55	24.5	-10	22.5	35	27.0	80	12.0	125	13.5
-95	4.0	-50	22.5	-5	26.0	40	32.5	85	12.5		
-90 (E)	**4.0**	**-45 (SE)**	**23.0**	**0 (S)**	**26.5**	**45 (SW)**	**34.5**	**90 (W)**	**19.0**		
-85	8.5	-40	25.5	5	30.5	50	32.5	95	19.5		

Notes: [None]

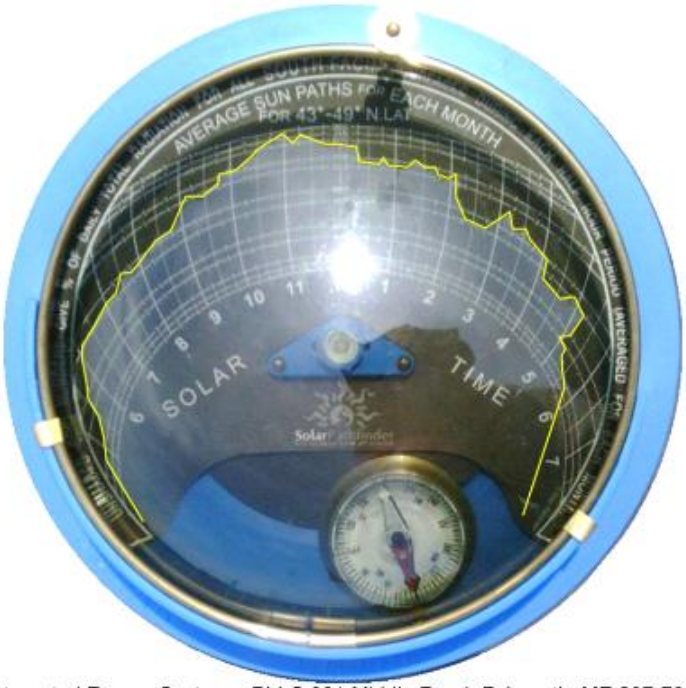

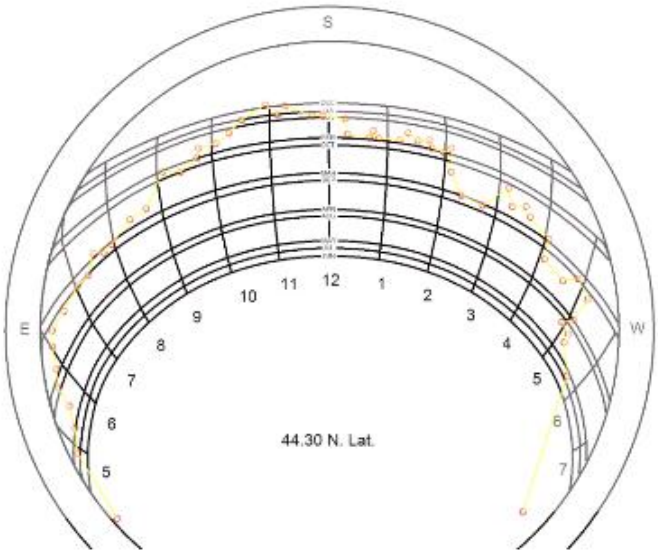

Integrated Energy Systems, PLLC
Summary Report

Solar Obstruction Data

Month	Ideal Solar Rad w/o Shading Azimuth=180.0 Tilt=43.7 KWH/m^2 /day	Actual Solar Rad w/o Shading Azimuth=180.0 Tilt=44.3 KWH/m^2 /day	Actual Solar Rad w/ Shading Azimuth=180.0 Tilt=44.3 KWH/m^2 /day
January	2.80	2.80	0.49
February	3.20	3.21	2.07
March	5.50	5.51	4.82
April	4.30	4.29	4.23
May	4.79	4.77	4.72
June	4.19	4.17	4.13
July	4.39	4.37	4.31
August	4.78	4.77	4.69
September	4.61	4.61	4.33
October	2.97	2.97	2.02
November	2.68	2.69	0.74
December	2.11	2.11	0.06
Totals	**46.31**	**46.27**	**36.63**
	Effect: 100.00%	**Effect: 99.91%**	**Effect: 79.09%**
	Sun Hrs: 3.86	**Sun Hrs: 3.86**	**Sun Hrs: 3.05**

Azimuth/Altitude Data

Azimuth / Altitude (degrees) where North = 180 degrees

-125	3.0	-80	12.0	-35	23.5	10	32.0	55	24.0	100	17.5
-120 (ENE)	**3.0**	-75	15.0	**-30 (SSE)**	**24.5**	15	31.5	**60 (WSW)**	**21.0**	105	17.5
-115	3.5	-70	19.0	-25	23.0	20	30.5	65	19.5	110	17.5
-110	5.5	-65	21.0	-20	21.0	25	28.0	70	21.0	115	17.0
-105	6.0	**-60 (ESE)**	**22.5**	-15	21.5	**30 (SSW)**	**28.0**	75	20.5	**120 (WNW)**	**15.5**
-100	4.5	-55	24.5	-10	22.5	35	27.0	80	12.0	125	13.5
-95	4.0	-50	22.5	-5	26.0	40	32.5	85	12.5		
-90 (E)	**4.0**	**-45 (SE)**	**23.0**	**0 (S)**	**26.5**	**45 (SW)**	**34.5**	**90 (W)**	**19.0**		
-85	8.5	-40	25.5	5	30.5	50	32.5	95	19.5		

Notes: [None]

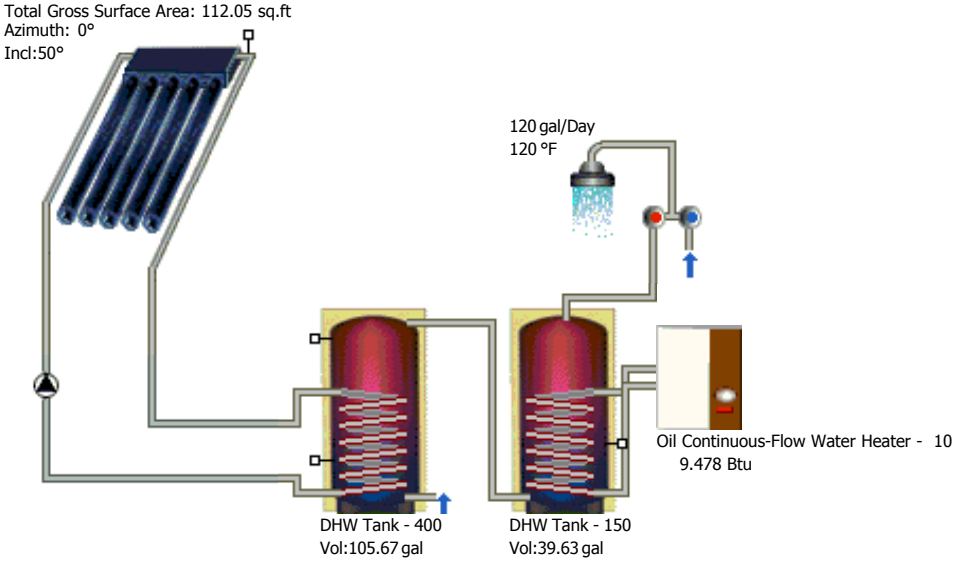

Results of Annual Simulation

Installed Collector Power:	24.86 kBtu/hr	
Installed Gross Solar Surface Area:	112.05 sq.ft	
Collector Surface Area Irradiation (Active Surface):	35.74 MBtu	373.98 kBtu/sq.ft
Energy Produced by Collectors:	20.28 MBtu	212.21 kBtu/sq.ft
Energy Produced by Collector Loop:	17.72 MBtu	185.39 kBtu/sq.ft
DHW Heating Energy Supply:	25.27 MBtu	
Solar Contribution to DHW:	16.78 MBtu	
Energy from Auxiliary Heating:	10.31 MBtu	
Fuel Oil Savings:		**190.3 gal**
CO2 Emissions Avoided:		**4,226.26 lbs**
DHW Solar Fraction:		**62.0 %**
Fractional Energy Saving (EN 12976):		**63.5 %**
System Efficiency:		**47.0 %**

Basic Data

Climate File

Location:	Portland ME
Climate Data Record:	"Portland ME"
Total Annual Global Radiation:	4.85 MBtu
Latitude:	43.65 °
Longitude:	70.32 °

Domestic Hot Water

Average Daily Consumption:	120 gal
Desired Temperature:	120 °F
Load Profile:	House US
Cold Water Temperature:	February:45.48 °F / August:52.72 °F
Circulation:	No

System Components

Collector Loop

Manufacturer:	EOS
Type:	EOS-S30
Number:	3.00
Total Gross Surface Area:	112.05 sq.ft
Total Active Solar Surface Area:	95.58 sq.ft
Tilt Angle:	50 °
Azimuth:	0 °

DHW Standby Tank

Manufacturer:	T*SOL Database
Type:	DHW Tank - 150
Volume:	39.63 gal

Solar Preheating Tank

Manufacturer:	T*SOL Database
Type:	DHW Tank - 400
Volume:	105.67 gal

Auxiliary Heating

Manufacturer:	T*SOL Database
Type:	Oil Continuous-Flow Water Heater - 10
Nominal Output:	34.12 kBtu/hr

Legend

Original T*SOL Database
With Test Report
Solar Keymark

Solar Energy Consumption as Percentage of Total Consumption

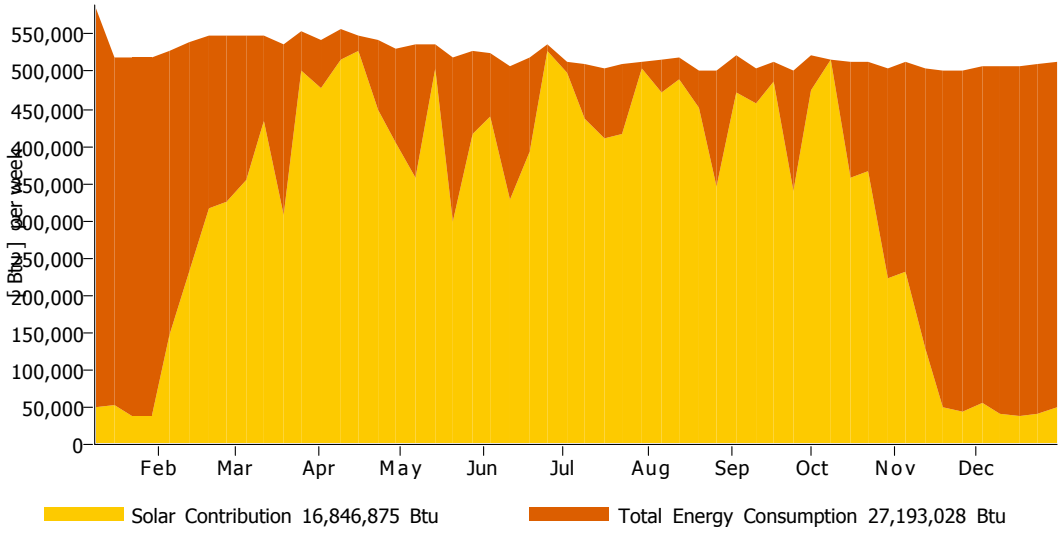

Daily Maximum Collector Temperature

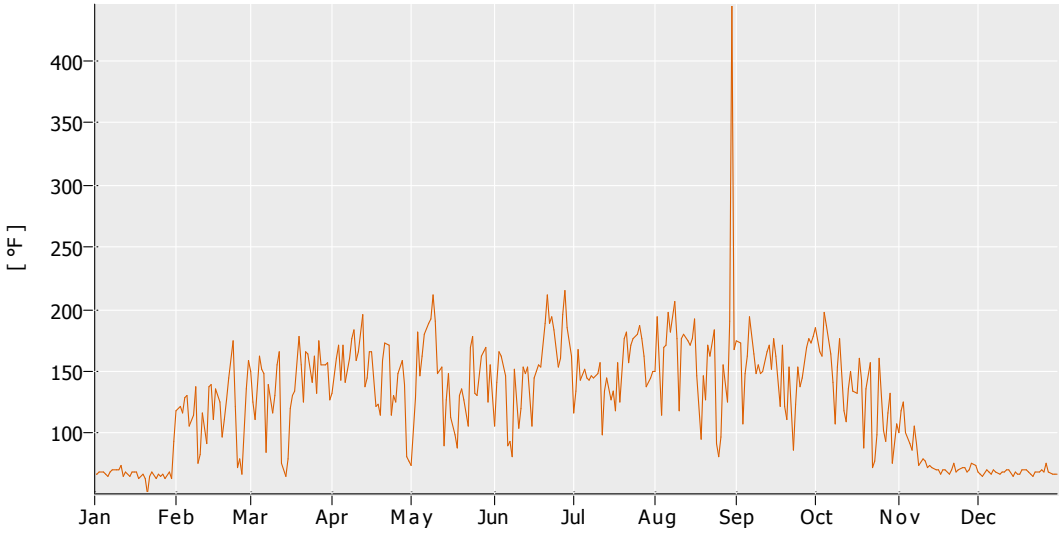

These calculations were carried out by T*SOL Pro 4.5 - the Simulation Programme for Solar Thermal Heating Systems. The results are determined by a mathematical model calculation with variable time steps of up to 6 minutes. Actual yields can deviate from these values due to fluctuations in climate, consumption and other factors.The system schematic diagram above does not represent and cannot replace a full technical drawing of the solar system.

Energy Balance Schematic

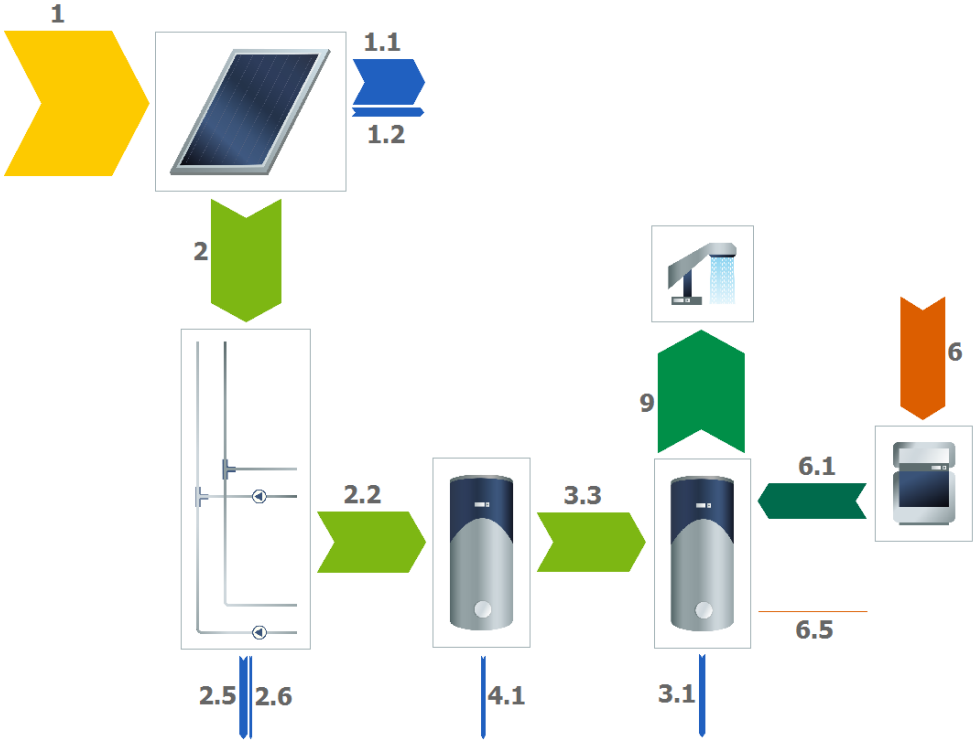

Legend

1	Collector Surface Area Irradiation (Gross Surface)	421 therm
1.1	Optical Collector Losses	13,025 kBtu
1.2	Thermal Collector Losses	2,494 kBtu
2	Energy from Collector Array	20,357 kBtu
2.2	Solar Energy to Preheating Tank	17,785 kBtu
2.5	Internal Piping Losses	2,167 kBtu
2.6	External Piping Losses	406 kBtu
3.1	Tank Losses	1,831 kBtu
3.3	Preheating Tank to Tank	16,847 kBtu
4.1	Tank Losses	938 kBtu
6	Final Energy	12,866 kBtu
6.1	Supplementary Energy to Tank	10,346 kBtu
6.5	Heating Element	0 kBtu
9	DHW Energy from Tank	25,362 kBtu

Glossary

1 Collector Surface Area Irradiation (Gross Surface)
Energy Irradiated onto Tilted Collector Area (Total Solar Surface)

1.1 Optical Collector Losses
Reflection and Other Losses

1.2 Thermal Collector Losses
Heat Conduction and Other Losses

2 Energy from Collector Array
Energy Output at Collector Array Outlet (i.e. Before the Piping)

2.2 Solar Energy to Preheating Tank
Collector Array Energy Minus Piping Losses

2.5 Internal Piping Losses
Internal Piping Losses

2.6 External Piping Losses
External Piping Losses

3.1 Tank Losses
Heat Losses via Surface Area

3.3 Preheating Tank to Tank
Heat from Preheating Tank to Tank

4.1 Tank Losses
Heat Losses via Surface Area

6 Final Energy
Final Energy Current into System. This can flow in as natural gas, oil or electricity (not including solar energy) taking efficiency levels into account

6.1 Supplementary Energy to Tank
Supplementary Energy (e.g. Boiler) to Tank

6.5 Heating Element
Energy from Heating Element

9 DHW Energy from Tank
Heat for DHW Appliances from Tank

Report-/Druckmodul List & Label® Version 13: Copyright combit® GmbH 1991-2007

Appendix E- Life Cycle Cost Analysis

Lifecycle Summary

Project: Gardiner Boiler Study
Prepared By: Integrated Energy Systems, PLLC

8/3/2009
9:18:08 PM

City Hall Boiler

Type of Analysis	Public Sector Lifecycle Analysis	
Type of Design Alternatives	Mutually Exclusive	
Length of Analysis	25	yrs
Discount Rate	3.00	%

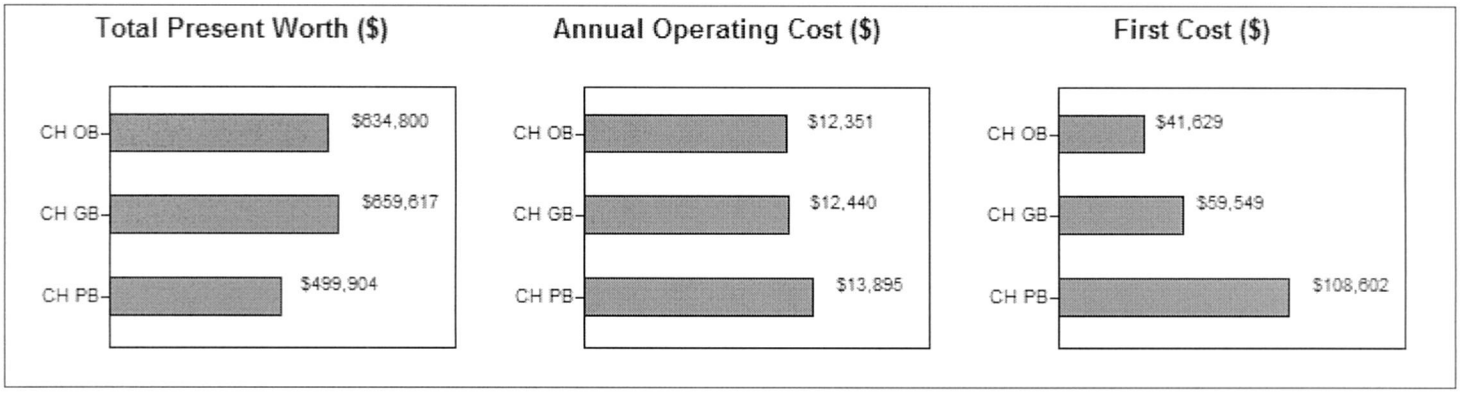

Table 1. Executive Summary

Economic Criteria	Best Design Case for Each Criteria	Value ($)
Incremental SIR Analysis	City Hall Pellet Boiler	-
Lowest Total Present Worth	City Hall Pellet Boiler	$499,904
Lowest Annual Operating Cost	City Hall Oil Boiler	$12,351
Lowest First Cost	City Hall Oil Boiler	$41,629

Table 2. Design Cases Ranked by First Cost

Design Case Name	Design Case Short Name	Total Present Worth ($)	Annual Operating Cost ($/yr)	First Cost ($)
City Hall Oil Boiler	CH OB	$634,800	$12,351	$41,629
City Hall Gas Boiler	CH GB	$659,617	$12,440	$59,549
City Hall Pellet Boiler	CH PB	$499,904	$13,895	$108,602

Table 3. Incremental Analysis Data

Challenger	Base Case	Additional First Cost ($)	NPW Savings ($)	SIR	Payback Period (yrs)
CH GB	CH OB [Winner]	$17,920	$-24,817	-0.385	n/a
CH PB [Winner]	CH OB	$66,973	$134,896	3.014	16.8

Lifecycle Summary

Project: Gardiner Boiler Study
Prepared By: Integrated Energy Systems, PLLC

8/3/2009
8:52:11 PM

Public Works Boiler

Type of Analysis	Public Sector Lifecycle Analysis	
Type of Design Alternatives	Mutually Exclusive	
Length of Analysis	25	yrs
Discount Rate	3.00	%

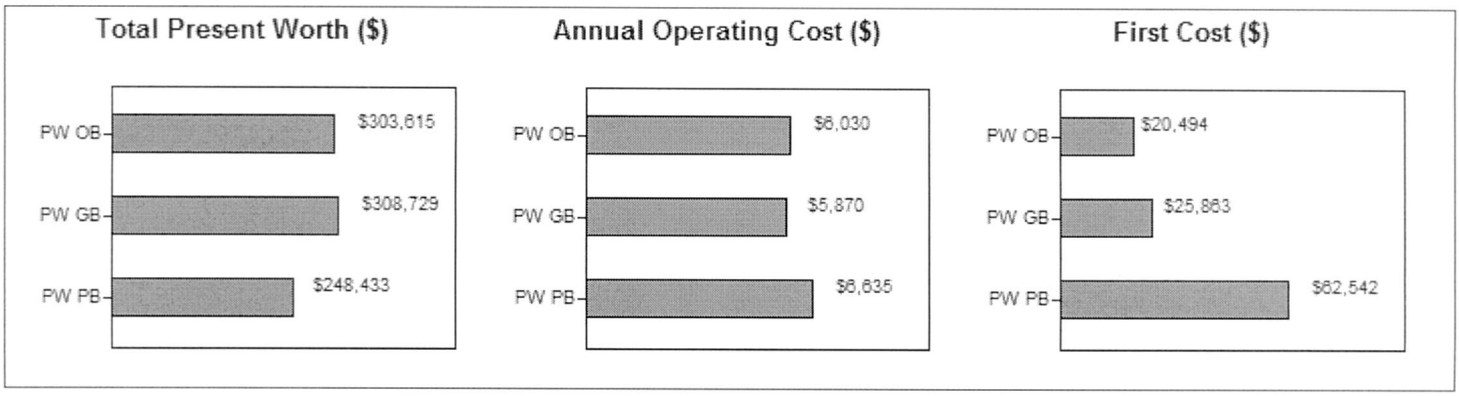

Table 1. Executive Summary

Economic Criteria	Best Design Case for Each Criteria	Value ($)
Incremental SIR Analysis	Public Works Pellet Boiler	-
Lowest Total Present Worth	Public Works Pellet Boiler	$248,433
Lowest Annual Operating Cost	Public Works Gas Boiler	$5,870
Lowest First Cost	Public Works Oil Boiler	$20,494

Table 2. Design Cases Ranked by First Cost

Design Case Name	Design Case Short Name	Total Present Worth ($)	Annual Operating Cost ($/yr)	First Cost ($)
Public Works Oil Boiler	PW OB	$303,615	$6,030	$20,494
Public Works Gas Boiler	PW GB	$308,729	$5,870	$25,863
Public Works Pellet Boiler	PW PB	$248,433	$6,635	$62,542

Table 3. Incremental Analysis Data

Challenger	Base Case	Additional First Cost ($)	NPW Savings ($)	SIR	Payback Period (yrs)
PW GB	PW OB [Winner]	$5,369	$-5,114	0.048	n/a
PW PB [Winner]	PW OB	$42,048	$55,182	2.312	18.4

Lifecycle Summary

Project: Gardiner Boiler Study
Prepared By: Integrated Energy Systems, PLLC

8/3/2009
8:49:11 PM

Solar water heater

Type of Analysis	Public Sector Lifecycle Analysis	
Type of Design Alternatives	Mutually Exclusive	
Length of Analysis	25	yrs
Discount Rate	3.00	%

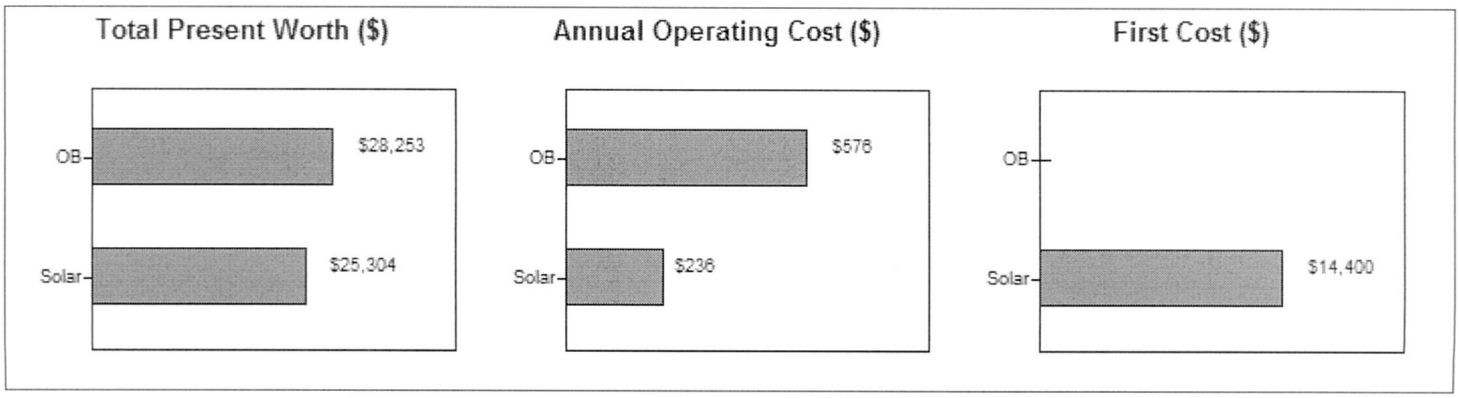

Table 1. Executive Summary

Economic Criteria	Best Design Case for Each Criteria	Value ($)
Incremental SIR Analysis	Solar water heater	-
Lowest Total Present Worth	Solar water heater	$25,304
Lowest Annual Operating Cost	Solar water heater	$236
Lowest First Cost	Water heated by oil boiler	$0

Table 2. Design Cases Ranked by First Cost

Design Case Name	Design Case Short Name	Total Present Worth ($)	Annual Operating Cost ($/yr)	First Cost ($)
Water heated by oil boiler	OB	$28,253	$576	$0
Solar water heater	Solar	$25,304	$236	$14,400

Table 3. Incremental Analysis Data

Challenger	*Base Case*	Additional First Cost ($)	NPW Savings ($)	SIR	Payback Period (yrs)
Solar [Winner]	OB	$14,400	$2,950	1.205	22.5

Appendix F- Energy Data

ANNUAL ENERGY CONSUMPTION **CITY HALL/POLICE/FIRE**

HEATING

Existing Boiler	$1.98	per gallon	138500	Btu/gallon
Oil	$1.98	per gallon	138500	Btu/gallon
Propane	$1.45	per gallon	91500	Btu/gallon
Natural gas	$1.50	per therm	100000	Btu/therm
Electricity	$0.13	per kwhr	3413	Btu/kwhr
Wood pellets	$240.00	per ton	7750	Btu/lb
Wood chips	$50.00	per ton	4800	Btu/lb

Degree Days	7546	2007/2008
Correction Factor	0.62	
Inside Air Design Temp	70	
Outside Air Design Temp	-3	
Existing Efficiency	80%	
Oil Efficiency	86%	
Propane Efficiency	94%	
Natural gas Efficiency	94%	
Electric Efficiency	100%	
Heat Pump Efficiency	300%	
Wood pellet Efficiency	82%	
Wood chip Efficiency	65%	
Design Heat Loss	445000	Btu/hr

Existing Boiler:	6178	Gallons per year	x	$1.98	/gallon=	$12,232	per year
Oil:	5747	Gallons per year	x	$1.98	/gallon=	$11,378	per year
Propane:	7958	Gallons per year	x	$1.45	/gallon=	$11,539	per year
Natural Gas	7282	therms per year	x	$1.50	/therm=	$10,922	per year
Electric:	200549	kwhr	x	$0.13	/kwhr=	$26,071	per year
CC Heat Pump:	66850	kwhr	x	$0.13	/kwhr=	$8,690	per year
Wood pellets:	53.9	tons per year	x	$240.00	/ton=	$12,925	per year
Wood chips:	110	tons per year	x	$50.00	/ton=	$5,485	per year

DOMESTIC HOT WATER

Number of people:	6	Days per Week:	7
Gallons per person per day	20	Weeks per Year:	52
Water temperature inlet:	50		
Water temperature outlet:	120		
Standby losses:	35%		

Existing Boiler:	311	Gallons per year	x	$1.98	=	$616	per year
Oil:	289	Gallons per year	x	$1.98	=	$573	per year
Propane:	401	Gallons per year	x	$1.45	=	$581	per year
Natural Gas:	366	Therms per year	x	$1.50	=	$550	per year
Electric:	10094	kwhr per year	x	$0.13	=	$1,312	per year
Wood pellets:	3	Tons per year	x	$240.00	=	$651	per year
Wood chips:	4	Tons per year	x	$50.00	=	$191	per year

ANNUAL ENERGY COST COMPARISON (Heating and domestic hot water)

Existing System:	**$12,847**	
Oil:	**$11,951**	
Propane:	**$12,120**	
Natural Gas	**$11,472**	
Electric:	**$27,384**	
Ht Pump:	**$10,003**	with electric water heater
Wood Pellets:	**$13,575**	
Wood Chips:	**$5,675**	

ANNUAL ENERGY CONSUMPTION **PUBLIC WORKS**

HEATING

Existing Boiler	$1.98	per gallon	138500	Btu/gallon
Oil	$1.98	per gallon	138500	Btu/gallon
Propane	$1.45	per gallon	91500	Btu/gallon
Natural gas	$1.50	per therm	100000	Btu/therm
Electricity	$0.13	per kwhr	3413	Btu/kwhr
Wood pellets	$240.00	per ton	7750	Btu/lb
Wood chips	$50.00	per ton	4800	Btu/lb

Degree Days	7546	2007/2008
Correction Factor	0.62	
Inside Air Design Temp	70	
Outside Air Design Temp	-3	
Existing Efficiency	80%	
Oil Efficiency	86%	
Propane Efficiency	94%	
Natural gas Efficiency	94%	
Electric Efficiency	100%	
Heat Pump Efficiency	300%	
Wood pellet Efficiency	82%	
Wood chip Efficiency	65%	
Design Heat Loss	217000	Btu/hr

Existing Boiler:	3012	Gallons per year	x	$1.98	/gallon=	$5,965	per year
Oil:	2802	Gallons per year	x	$1.98	/gallon=	$5,548	per year
Propane:	3881	Gallons per year	x	$1.45	/gallon=	$5,627	per year
Natural Gas	3551	therms per year	x	$1.50	/therm=	$5,326	per year
Electric:	97796	kwhr	x	$0.13	/kwhr=	$12,713	per year
CC Heat Pump:	32599	kwhr	x	$0.13	/kwhr=	$4,238	per year
Wood pellets:	26.3	tons per year	x	$240.00	/ton=	$6,303	per year
Wood chips:	53	tons per year	x	$50.00	/ton=	$2,674	per year

DOMESTIC HOT WATER

Number of people:	4	Days per Week:	5
Gallons per person per day	5	Weeks per Year:	56
Water temperature inlet:	50		
Water temperature outlet:	120		
Standby losses:	50%		

Existing Boiler:	44	Gallons per year	x	$1.98	=	$88	per year
Oil:	41	Gallons per year	x	$1.98	=	$82	per year
Propane:	57	Gallons per year	x	$1.45	=	$83	per year
Natural Gas:	52	Therms per year	x	$1.50	=	$78	per year
Electric:	1438	kwhr per year	x	$0.13	=	$187	per year
Wood pellets:	0	Tons per year	x	$240.00	=	$93	per year
Wood chips:	1	Tons per year	x	$50.00	=	$27	per year

ANNUAL ENERGY COST COMPARISON (Heating and domestic hot water)

Existing Boiler:	**$6,052**	
Oil:	**$5,630**	
Propane:	**$5,710**	
Natural Gas	**$5,405**	
Electric:	**$12,900**	
Ht Pump:	**$4,425**	with electric water heater
Wood Pellets:	**$6,395**	
Wood Chips:	**$2,702**	

Integrated Energy Systems, PLLC

Richard Grondin, PE, LEED AP
301 Middle Road
Falmouth, ME 04105-1229
T 207.781.4263
F 207.781.4263

Energy Comparison After Combustion

Heating Source	Fuel cost /unit	Cost per Therm	Equivalent Cost to a gallon of oil
Existing Boiler Fuel Source	$1.98 per gallon	$1.79 per therm	$2.13
Electricity(electric heat)	$0.13 per kwhr	$3.81 per therm	$4.54
Propane	$1.45 per gallon	$1.69 per therm	$2.01
Oil	$1.98 per gallon	$1.66 per therm	$1.98
Electricity(cold climate heat pump, or geothermal heat pump)	$0.13 per kwhr	$1.27 per therm	$1.51
Natural gas	$1.50 per therm	$1.60 per therm	$1.90
Wood pellets	$240.00 per ton	$1.89 per therm	$2.25
Wood chips	$50.00 per ton	$0.80 per therm	$0.95
Solar	$0.00 per therm	$0.00 per therm	$0.00
Wind	$0.00 per kw	$0.00 per therm	$0.00

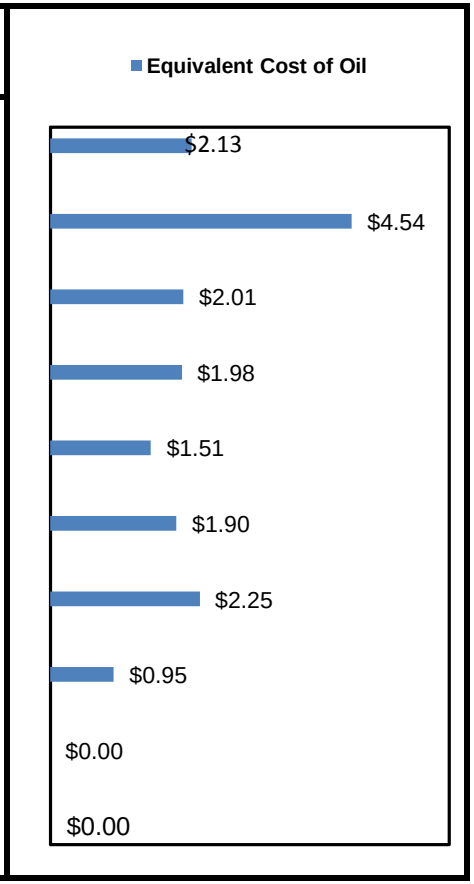

1 therm = 100,000 Btu/hr